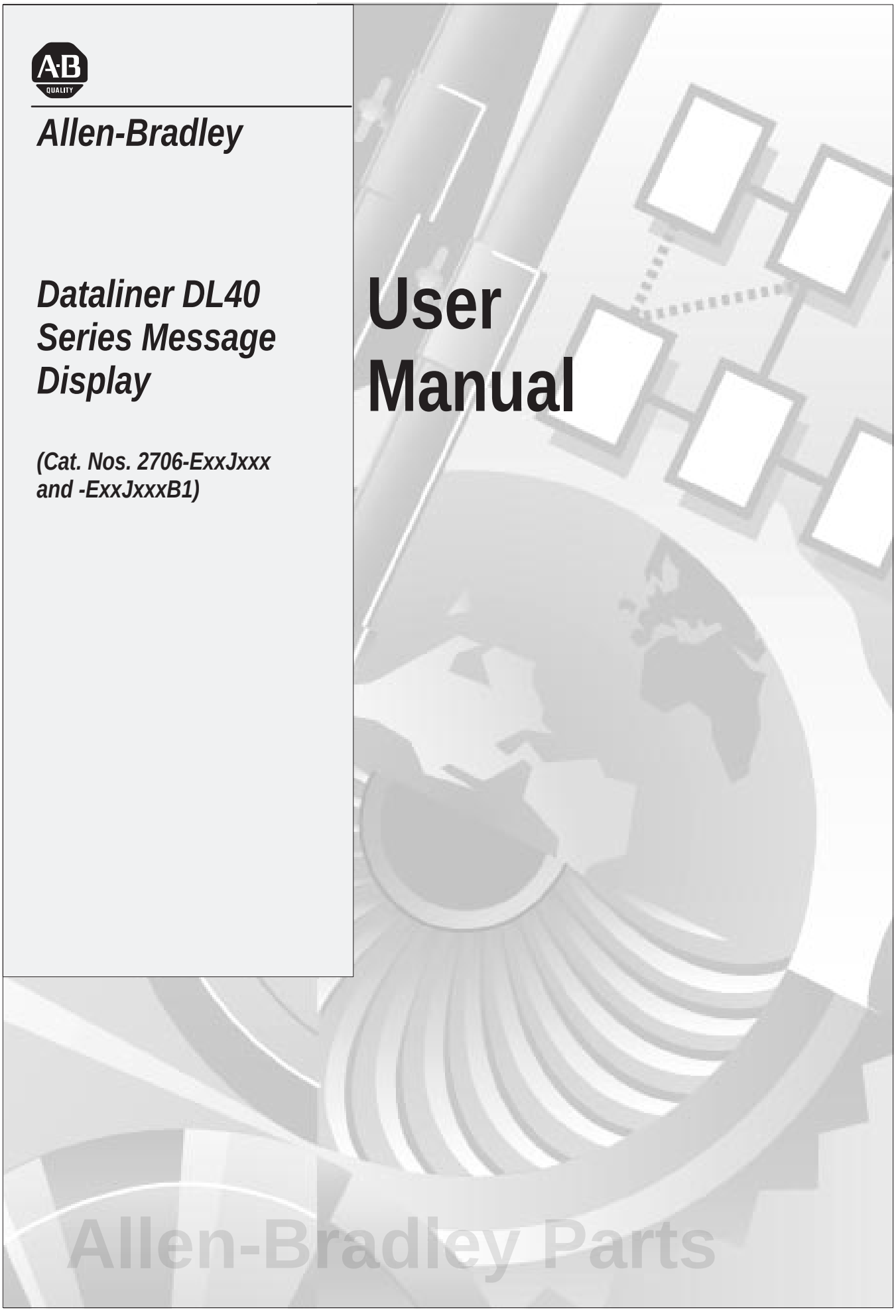

Allen-Bradley

Dataliner DL40 Series Message Display

User Manual

(Cat. Nos. 2706-ExxJxxx and -ExxJxxxB1)

Allen-Bradley Parts

Important User Information

Solid state equipment has operational characteristics differing from those of electromechanical equipment. “Safety Guidelines for the Application, Installation and Maintenance of Solid State Controls” (Publication SGI-1.1) describes some important differences between solid state equipment and hard–wired electromechanical devices. Because of this difference, and also because of the wide variety of uses for solid state equipment, all persons responsible for applying this equipment must satisfy themselves that each intended application of this equipment is acceptable.

In no event will the Allen-Bradley Company be responsible or liable for indirect or consequential damages resulting from the use or application of this equipment or software.

The examples and diagrams in this manual are included solely for illustrative purposes. Because of the many variables and requirements associated with any particular installation, the Allen-Bradley Company cannot assume responsibility or liability for actual use based on the examples and diagrams.

No patent liability is assumed by Allen-Bradley Company with respect to use of information, circuits, equipment, or software described in this manual.

Reproduction of the contents of this manual, in whole or in part, without written permission of the Allen-Bradley Company is prohibited.

Throughout this manual we use notes to make you aware of safety considerations.

ATTENTION: Identifies information about practices or circumstances that can lead to personal injury or death, property damage, or economic loss.

Attentions help you:

- identify a hazard
- avoid the hazard
- recognize the consequences

Important: Identifies information that is especially important for successful application and understanding of the product.

Overview

Chapter 1

Chapter Objectives . . . . . 1 – 1
Overview of this Manual . . . . . 1 – 1
Intended Audience . . . . . 1 – 2
Conventions Used . . . . . 1 – 2
Related Publications . . . . . 1 – 2

Introduction to the DL40

Chapter 2

Overview . . . . . 2 – 1
Main Features . . . . . 2 – 2
Offline Programming Software Option (Catalog Number 2706-ND1) . . . . . 2 – 2
PLC-5 Remote I/O PassThrough Via DH+ . . . . . 2 – 3
PLC-5E Remote I/O PassThrough Via Ethernet . . . . . 2 – 4
Support for Extended ASCII Character Set . . . . . 2 – 4
Onboard Editor . . . . . 2 – 5
Send ASCII Data to a PLC Via a Remote I/O Link . . . . . 2 – 5
Communications with Any Programmable Controller (Parallel Port Version) 2 – 5
Backup Operations . . . . . 2 – 5
Historical Events Stack . . . . . 2 – 6
Clock Operations . . . . . 2 – 6
RS-232 and RS-485 Ports . . . . . 2 – 6
Debug Mode (Parallel Port Version) . . . . . 2 – 6
Auxiliary Devices . . . . . 2 – 7
Background Messages . . . . . 2 – 7
Hidden Messages . . . . . 2 – 7
Embedded Variables . . . . . 2 – 7
Data Mode Selection . . . . . 2 – 8
Message Chaining . . . . . 2 – 8
Adjustable Parameters for Serial Communications . . . . . 2 – 8
Operating Modes . . . . . 2 – 9
Run Mode . . . . . 2 – 9
Other Operating Modes . . . . . 2 – 9
Special Messages . . . . . 2 – 10
System Requirements for Remote I/O Without PassThrough File Transfers . 2 – 10
System Requirements for Remote I/O PassThrough Using DH+ . . . . . 2 – 11
System Requirements for Remote I/O PassThrough Using Ethernet . . . . . 2 – 11
Catalog Numbers . . . . . 2 – 12
Compatible Keyboards . . . . . 2 – 12
Options & Accessories . . . . . 2 – 13

Allen-Bradley Parts

The Run Mode – Remote I/O — Chapter 3

Overview . . . . . 3 – 1
Message/Variable/Slave Run Mode . . . . . 3 – 2
Trigger Messages Via a PLC Using the Remote I/O Port . . . . . 3 – 2
Trigger Messages Via the Keyboard Port Or the RS-485 Port . . . . . 3 – 3
Send Variables to be Included In Message . . . . . 3 – 3
Insert ASCII Input Data Into a Message . . . . . 3 – 3
Return ASCII Input Data to a PLC . . . . . 3 – 3
Via Remote I/O . . . . . 3 – 3
Via RS-485 Port . . . . . 3 – 4
Return the Message Number of the Message Being Run to a PLC . . . . . 3 – 4
Send Real Time Clock Or Date Data to a PLC . . . . . 3 – 4
Put Messages on Historical Events Stack . . . . . 3 – 4
Require Handshake Between DL40 and PLC . . . . . 3 – 4
Override Slave Address Selected as a Message Attribute with an Address Sent with the Message Trigger . . . . . 3 – 4
Message/Variable Run Mode . . . . . 3 – 5
Message List Run Mode . . . . . 3 – 5
Create a List of Messages that is Continuously Displayed . . . . . 3 – 5
Insert ASCII Input Data into a Message . . . . . 3 – 5
Return ASCII Input Data to a PLC . . . . . 3 – 6
Return the Message Number of the Message Being Run to a PLC . . . . . 3 – 6
Send Real Time Clock Or Date Data to a PLC . . . . . 3 – 6
Put Messages on the Historical Events Stack . . . . . 3 – 6
Send Message to the Slave Address Selected as a Message Attribute . . . 3 – 6
Bit Trigger Run Mode . . . . . 3 – 6
Trigger Message by Sending a Bit Trigger Table . . . . . 3 – 6
Priority Message Number Section . . . . . 3 – 7
Priority Section . . . . . 3 – 7
Round Robin Section . . . . . 3 – 8
Return the Message Number of the Message Being Run to a PLC . . . . . 3 – 8
Insert ASCII Input Data into a Message . . . . . 3 – 8
Send DL40's Real Time Clock or Date Data to a PLC . . . . . 3 – 9
Put Messages on the Historical Events Stack . . . . . 3 – 9
Send Messages to the Slave Address Specified as a Message Attribute . . 3 – 9

The Run Mode – Parallel Port — Chapter 4

Overview . . . . . 4 – 1
Message/Variable/Slave Run Mode . . . . . 4 – 2
Trigger Messages Via the Parallel Port . . . . . 4 – 2

Trigger Messages Via the Keyboard Port or the RS-485 Port . . . . . 4 – 2
Send Variables to be Included In Message . . . . . 4 – 2
Insert ASCII Input Data Into a Message . . . . . 4 – 3
Return ASCII Input Data to a PLC . . . . . 4 – 3
Put Messages on Historical Events Stack . . . . . 4 – 3
Override Slave Address Selected as a Message Attribute with an Address Sent with the Message Trigger . . . . . 4 – 3
Message List Run Mode . . . . . 4 – 3
Create a List of Messages that is Continuously Displayed . . . . . 4 – 3
Put Messages on the Historical Events Stack . . . . . 4 – 4
Send Message to the Slave Address Selected as a Message Attribute . . . 4 – 4

Special Messages

Chapter 5

901 (or 01) Terminate Message – Clear Display . . . . . 5 – 1
902 (or 02) Clear Queue . . . . . 5 – 2
903 (or 03) Terminate Message – Clear Display and Queue . . . . . 5 – 2
904 (or 04) Reset Unit . . . . . 5 – 2
905 (or 05) Test Display . . . . . 5 – 2
906 (or 06) Print Historical Events Stack – Chronological Order . . . . . 5 – 2
907 (or 07) Print Historical Events Stack – Frequency of Occurrence . . . . . 5 – 3
908 (or 08) View Historical Events Stack . . . . . 5 – 3
909 (or 09) Clear Historical Events Stack . . . . . 5 – 4
910 (or 10) Interactive Clock Setting . . . . . 5 – 4
911 (or 11) Set Clock with Variable Data . . . . . 5 – 5
912 (or 12) Send Time To PLC (Remote I/O versions only) . . . . . 5 – 6
913 (or 13) Send Date to PLC (Remote I/O versions only) . . . . . 5 – 6
914 (or 14) View Display Parameters . . . . . 5 – 6
915 (or 15) Stop Special Messages/Resume Run Mode . . . . . 5 – 7
916 (or 16) Set Display Intensity . . . . . 5 – 7

Other Operating Modes

Chapter 6

Help Mode . . . . . 6 – 1
Historical Recall Mode . . . . . 6 – 1
Putting Messages on the Stack . . . . . 6 – 1
Time and Date Stamping of Messages Put on the Stack . . . . . 6 – 2
Resetting the Stack . . . . . 6 – 2
Historical Recall . . . . . 6 – 2
View the Stack . . . . . 6 – 3
Chronological Order . . . . . 6 – 3
Number of Occurrences . . . . . 6 – 5
Print Stack . . . . . 6 – 6

Allen-Bradley Parts

Remote Program Mode . . . . . 6 – 6
Backup Mode . . . . . 6 – 6
Entering Backup Mode from the DL40 Keyboard Port . . . . . 6 – 6
Entering Backup Mode from the Front Panel Push Buttons . . . . . 6 – 7
Write to Module . . . . . 6 – 7
Read from Module . . . . . 6 – 8
Error Messages . . . . . 6 – 9
Write to Tape . . . . . 6 – 9
Error Messages . . . . . 6 – 10
Read from Tape . . . . . 6 – 10
Error Messages . . . . . 6 – 11
Set Port Parameters Mode . . . . . 6 – 11
RS–232 Port . . . . . 6 – 11
PGMR / PRNTR SETUP . . . . . 6 – 12
RS-232 Tape Recorder Settings . . . . . 6 – 12
RS-485 Port . . . . . 6 – 12
Triggering Port Settings . . . . . 6 – 13
Clock Mode . . . . . 6 – 14
Via the Front Panel Push Buttons . . . . . 6 – 14
Via the DL40 Keyboard Port . . . . . 6 – 15
Show Clock . . . . . 6 – 15
Print Mode . . . . . 6 – 16
Debug Mode . . . . . 6 – 16
High True or Low True Logic . . . . . 6 – 17

Messages

Chapter 7

Overview . . . . . 7 – 1
Entering the Onboard Editor . . . . . 7 – 1
Exiting the Onboard Editor . . . . . 7 – 1
Onboard Editor Menu Tree . . . . . 7 – 2
Creating or Editing Messages . . . . . 7 – 3
Message Text . . . . . 7 – 3
Variables . . . . . 7 – 4
Insert Formatted Variable With [CTRL][V] . . . . . 7 – 4
Change Formatted Variable With [CTRL][F] . . . . . 7 – 5
Insert ASCII or BCD Variable With [CTRL][W] . . . . . 7 – 5
Insert Request for ASCII Input Data With [CTRL][X] . . . . . 7 – 6
Insert Time Into a Message With [CTRL][T] . . . . . 7 – 6
Insert Date Into a Message With [CTRL][Y] . . . . . 7 – 6
Note . . . . . 7 – 7
Testing Messages . . . . . 7 – 7
Message Attribute Defaults . . . . . 7 – 7
Display Line . . . . . 7 – 8

Scroll Message . . . . . 7 – 8
Print Message . . . . . 7 – 8
Send to Slave . . . . . 7 – 8
Wait Time . . . . . 7 – 9
AutoClear . . . . . 7 – 9
AutoRepeat . . . . . 7 – 10
Chain to Message . . . . . 7 – 10
Energize Relay . . . . . 7 – 10
Stack Message . . . . . 7 – 11
Stack Time . . . . . 7 – 11
Hide message . . . . . 7 – 11
Acknowledge message . . . . . 7 – 12
Notes on Using Message Attributes . . . . . 7 – 12
Options . . . . . 7 – 12
Run Mode . . . . . 7 – 13
Newest Message on Line 1 . . . . . 7 – 13
Autorun Message Number . . . . . 7 – 13
Background Message Number . . . . . 7 – 14
Special Message Start Number . . . . . 7 – 14
Message Queueing Enabled . . . . . 7 – 14
Time Format . . . . . 7 – 14

Serial Communications **Chapter 8**

Chapter Objectives . . . . . 8 – 1
Introduction . . . . . 8 – 1
Port Usage . . . . . 8 – 1
Uses of the RS-232 Port . . . . . 8 – 1
Uses of the RS-485 Port . . . . . 8 – 1
Uses of the Keyboard Port . . . . . 8 – 2
Triggering Messages via Keyboard Port or RS-485 Port . . . . . 8 – 3
Message/Variable/Slave Run Mode . . . . . 8 – 3
Message/Variable and Bit Trigger Run Modes . . . . . 8 – 4
Message List Run Mode . . . . . 8 – 4
Inputting Binary/BCD Variables via Keyboard Port or RS-485 Port . . . . . 8 – 5
Inputting ASCII / BCD Variables via Keyboard Port or RS-485 Port . . . . . 8 – 5
Inputting ASCII Input Data via the Keyboard Port . . . . . 8 – 6
Inputting ASCII Input Data via the RS-485 Port . . . . . 8 – 7

Using the Parallel Port **Chapter 9**

Chapter Objectives . . . . . 9 – 1
Description of the Parallel Port . . . . . 9 – 1

Allen-Bradley Parts

Selecting Data Format . . . . . 9 – 2
Using Binary Data Input . . . . . 9 – 2
Using BCD Data Input . . . . . 9 – 3
Logic Voltage Levels . . . . . 9 – 4
Message/Variable/Slave Run Mode . . . . . 9 – 5
Triggering Rules example: . . . . . 9 – 6
Message List Run Mode . . . . . 9 – 7
Sampling . . . . . 9 – 7
AC Sampling . . . . . 9 – 8

Using Remote I/O

Chapter 10

Chapter Objectives . . . . . 10 – 1
Communication . . . . . 10 – 1
Remote I/O Architecture . . . . . 10 – 2
Physical vs. Logical . . . . . 10 – 5
Corresponding Publications for Processors and Scanners . . . . . 10 – 6
Remote I/O Configuration . . . . . 10 – 7
Triggering Messages . . . . . 10 – 8
Triggering the Same Message Twice in a Row . . . . . 10 – 9
Returning Data to the PLC . . . . . 10 – 9
ASCII Input Data . . . . . 10 – 9
Clock/Date Data . . . . . 10 – 9
Sending Variables . . . . . 10 – 10
Definitions . . . . . 10 – 11
Message/Variable/Slave and Message/Variable Run Modes . . . . . 10 – 14
Discrete I/O . . . . . 10 – 14
Triggering a Message . . . . . 10 – 14
Return Message Number and ASCII Data for Message Displayed to PLC . . . . . 10 – 16
Return Clock or Date Data to PLC . . . . . 10 – 17
Block Transfer . . . . . 10 – 18
Triggering a Message (Block Transfer Write) . . . . . 10 – 19
Return Message Number and ASCII Data for Message Being Displayed to PLC (Block Transfer Read) . . . . . 10 – 20
Return Clock or Date Data to PLC (Block Transfer Read) . . . . . 10 – 21
Message List Run Mode . . . . . 10 – 22
Discrete I/O . . . . . 10 – 22
Adding or Deleting Messages and/or Triggering a Priority Message . . . 10 – 22
Return Message Number and ASCII Data for Message Being Displayed and Length of Message List to PLC . . . . . 10 – 22
Return Clock or Date Data to PLC . . . . . 10 – 23
Block Transfer . . . . . 10 – 23
Adding or Deleting Messages and/or Triggering a Priority Message (Block Transfer Write) . . . . . 10 – 24

Return Message Number and ASCII Data for Message Being Displayed and Length of Message List to PLC (Block Transfer Read) . . . . . 10 – 24
Return Clock or Date Data to PLC (Block Transfer Read) . . . . . 10 – 25
Bit Trigger Run Mode . . . . . 10 – 25
Discrete I/O . . . . . 10 – 26
Triggering Messages . . . . . 10 – 26
Return Message Number for Message Being Displayed to PLC . . . . . 10 – 26
Return Clock or Date Data to PLC . . . . . 10 – 27
Block Transfer . . . . . 10 – 27
Triggering a Message (Block Transfer Write) . . . . . 10 – 27
Return Message Number for Message Being Displayed to PLC (Block Transfer Read) . . . . . 10 – 28
Return Clock or Date Data to PLC (Block Transfer Read) . . . . . 10 – 28
The Handshake Bit . . . . . 10 – 28

Installation and Wiring

Chapter 11

Chapter Objectives . . . . . 11 – 1
Mounting the DL40 . . . . . 11 – 1
Electrical Precautions . . . . . 11 – 5
Input Voltage Requirements . . . . . 11 – 5
Wiring the DL40 . . . . . 11 – 5
The Remote I/O Connector . . . . . 11 – 6
Connecting to a Scanner Module . . . . . 11 – 7
The Parallel Port . . . . . 11 – 8
The RS-485 Port Set to Open Protocol . . . . . 11 – 9
RS-485 Port Set to Programmer . . . . . 11 – 10
RS-485 Port Set to DL Slaves . . . . . 11 – 11
The RS-232 Port . . . . . 11 – 12
The Alarm Relay . . . . . 11 – 12
The Remote Reset . . . . . 11 – 13
Keyboard Port . . . . . 11 – 13
The AC Power Connector . . . . . 11 – 13

DIP Switch Settings

Chapter 12

Chapter Objections . . . . . 12 – 1
Remote I/O Units . . . . . 12 – 1
Setting Switch Bank #1 . . . . . 12 – 2
Setting Switch Bank #2 . . . . . 12 – 4
Notes on Switch Settings . . . . . 12 – 5
Fast Reset Sequence (Switch #3) . . . . . 12 – 5
Block Transfer Enabled (Switch #4) . . . . . 12 – 5
Last Chassis (Switch #5) . . . . . 12 – 5

Allen-Bradley Parts

Keyboard Type (Switch #6) . . . . . 12 – 5
Handshake Enable (Switch #7) . . . . . 12 – 5
Last State (Switch #8) . . . . . 12 – 5
Select Button Enable (Switch #9) . . . . . 12 – 6
Setting Switch Bank #3 . . . . . 12 – 6
Parallel Port Unit . . . . . 12 – 11
DIP Switch Locations . . . . . 12 – 11
DIP Switch Functions . . . . . 12 – 11
Setting Switch Bank #1 . . . . . 12 – 12
Debug (Switch #2) . . . . . 12 – 12
Fast Reset Sequence (Switch #3) . . . . . 12 – 12
Keyboard Type (Switch #6) . . . . . 12 – 12
Select Enable (Switch #9) . . . . . 12 – 12
Setting Switch Bank #2 . . . . . 12 – 13

Specifications — Chapter 13

Display Characters . . . . . 13 – 1
Electrical . . . . . 13 – 1
PLC Controller Remote I/O Communications . . . . . 13 – 1
Serial Communications Ports . . . . . 13 – 1
Keyboard Port . . . . . 13 – 2
Parallel Input Port 5 to 24 volts DC . . . . . 13 – 2
Parallel Input Port Communications . . . . . 13 – 2
Environmental Specifications . . . . . 13 – 2
Weights . . . . . 13 – 2

Error and Status Messages — Appendix A

Message Display Worksheets — Appendix B

Using the Worksheets . . . . . B – 1
Two Line Worksheet . . . . . B – 1
Four Line Worksheet . . . . . B – 2

Cables — Appendix C

2706-NC12 . . . . . C – 1
2706-NC13 . . . . . C – 1
2706-NC14 . . . . . C – 2
2706-NC15 . . . . . C – 2
DL40 to Allen-Bradley 1770-SA or -SB Tape Recorder . . . . . C – 3

ASCII & Extended ASCII Character Sets

Appendix D

ASCII Character Set . . . . . D – 1
Extended ASCII Character Set . . . . . D – 2

Allen-Bradley Parts

Chapter 1

Overview

Chapter Objectives

Read this chapter to familiarize yourself with the rest of the manual. You will learn about:

- Contents of this manual
- Intended audience
- Conventions used.

Overview of this Manual

This manual will tell you how to install and use your DL40 Series Dataliner Message Display, Version 3.00.

Note: The version of your unit is displayed when you reset or power–up your DL40.

The manual contains the following Chapters and Appendixes:

Chapter	Title	Purpose
1	Using This Manual	An overview of the manual.
2	Introduction to the DL40	Describes main features and operating capabilities of the DL40.
3	The Run Mode – Remote I/O	Describes how the DL40 Remote I/O version operates in the Run Mode and how it uses Special Messages.
4	The Run Mode – Parallel Port	Describes how the DL40 parallel version operates in the Run Mode and how it uses Special Messages.
5	Other Operating Modes	Describes how the DL40 operates in the other operational modes.
6	Using the Onboard Editor	A quick reference for using the Onboard Editor.
7	Messages	Describes how to use the Onboard Editor to edit messages and set message options.
8	Using the Parallel Port	Describes the Parallel Port and data sampling methods.
9	Using Remote I/O	Describes using the Remote I/O version of the DL40 with Allen–Bradley PLCs.
10	Installation and Wiring	Installation procedures for both the Parallel Port and Remote I/O DL40s.
11	DIP Switch Settings	Setting DIP switches for Remote I/O and Parallel Port versions of the DL40.
12	Specifications	
Appendix A	Error & Status Messages	
Appendix B	Message Display Work-sheets	

Chapter	Title	Purpose
Appendix C	Cables	
Appendix D	Extended ASCII Character Set	

Intended Audience

No special knowledge is needed to enter or edit messages. However, since the Dataliner message display must be connected to peripheral equipment, we assume you are familiar with communication terminology, especially when using the Remote I/O version with a PLC.

Conventions Used

The following conventions are used in this manual:

- All menus and screens reproduced in this manual are approximate renderings of what you will see on your terminal screen. Allen-Bradley reserves the right to make minor modifications to any menu or screen to help improve performance.
- A symbol or word in brackets represents a single key that you press. These include keys such as **[A]** or **[Del]**. Since the Dataliner can be programmed with a variety of keyboards or terminals, the printing on your keyboard may be different from the symbol or word indicated in brackets. This manual uses ↵ to specify the carriage return function of a keyboard. On your keyboard this may correspond to an **[ENTER]**, ↵ , or **[Rtrn]** key.
- The up caret, **^**, may be used in place of the **[CTRL]** where space requires. For example, **^W** means the same as **[CTRL][W]**. This means you should press **[CTRL]** and **[W]** keys simultaneously.
- In the following chapters we will refer to the Dataliner DL40 Series Message Display as the DL40.

Related Publications

Other publications to which you may want to refer include:

- *Dataliner DL40 Series Message Display Offline Programming Software User Manual* (Publication 2706–808)

Allen-Bradley Parts

Chapter 2

Introduction to the DL40

This chapter describes some of the key features and operating capabilities of the DL40 message display. Refer to the Table of Contents or Index for help in locating more detailed information throughout this manual.

Overview

The DL40 Dataliner Message Display is available in two- or four-line configurations (capable of displaying 20 characters per line) in two basic versions:

- **Remote I/O.** This version is designed to enable two-way communications with the Allen-Bradley family of Programmable Logic Controllers (PLCs) and Small Logic Controllers (SLCs). A remote I/O DL40 can appear to the PLC or SLC as any size I/O rack ($^1/_4$, $^1/_2$, $^3/_4$, or full).
- **Parallel Port.** This version is designed to receive message number triggers, slave addresses, and variable data from a PLC or SLC output module via 16 data lines and 4 strobe lines (indicating the type of data).

In addition, both versions support:

- **RS-485 communications** for serial message triggering or slave message display network communications, or RS-485 networked message file transfers with a PC Computer.
- **RS-232 communications** for direct message file upload and downloads from a personal computer operating the DL40 Offline Programming Software.

The DL40 stores messages of varying length within its own memory. Each message is identified with a unique *message number* from 1 to 9999. The stored messages are placed in an internal memory queue when *triggered* by a command from your control system. They are then *run* according to attributes you have selected in the DL40 system.

The DL40 can display a wide variety of characters and symbols, including:

- Uppercase letters
- Lowercase letters
- Punctuation
- Special characters from the extended ASCII character set

A person with normal vision can easily read the display from a distance of up to 25 feet.

Main Features

The DL40 message display is a versatile tool that comes equipped with a full range of high-end programming and performance features. A summary of those features appears below.

Table 2.A
Summary of DL40 capabilities

Capability	Remote I/O Version	Parallel Port Version
Supports offline programming software	**Yes**	**Yes**
PLC-5 Remote I/O PassThrough via DH+	**Yes**	**No**
PLC-5E Remote I/O PassThrough via Ethernet	**Yes**	**No**
Extended ASCII character set support	**Yes**	**Yes**
Onboard editor	**Yes**	**Yes**
Send ASCII data to a PLC via a Remote I/O link	**Yes**	**No**
Send ASCII data to a device via an RS-485 link	**Yes**	**Yes**
Communications with any programmable controller	**No**	**Yes**
Backup operations	**Yes**	**Yes**
Customizable historical events stack	**Yes**	**Yes**
Clock operations	**Yes**	**Yes**
RS-232 and RS-485 ports	**Yes**	**Yes**
Debug Mode	**No**	**Yes**
Support for auxiliary devices such as slave displays and printers	**Yes**	**Yes**
Background messages	**Yes**	**Yes**
Hidden messages	**Yes**	**Yes**
Embedded variables	**Yes**	**Yes**
Data mode selection	**Yes**	**Yes**
Message chaining	**Yes**	**Yes**
Adjustable parameters for serial communications	**Yes**	**Yes**

Offline Programming Software Option (Catalog Number 2706-ND1)

You can easily and quickly create and edit application files using this offline programming utility. You can use its interactive menus on a personal computer to create messages, set message attributes, and download to one or more DL40 message displays.

Allen-Bradley Parts

Figure 2.1
Easy to understand, menu–driven interface that helps guide you through the program

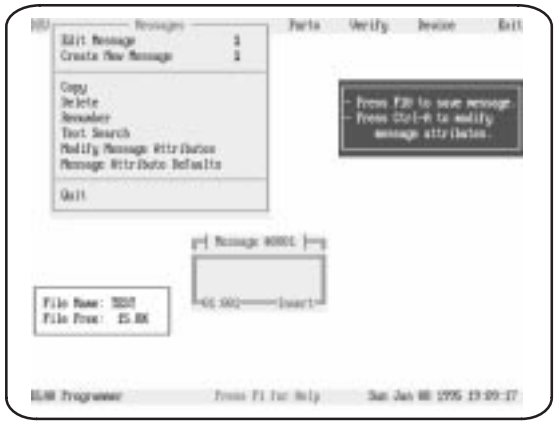

Create Message editing screen

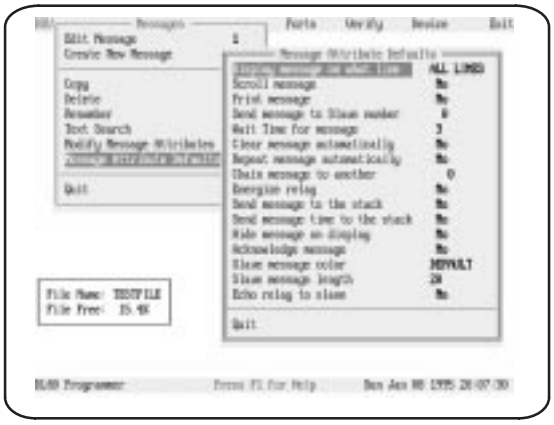

Set Message Attributes window

Download Message Files screen

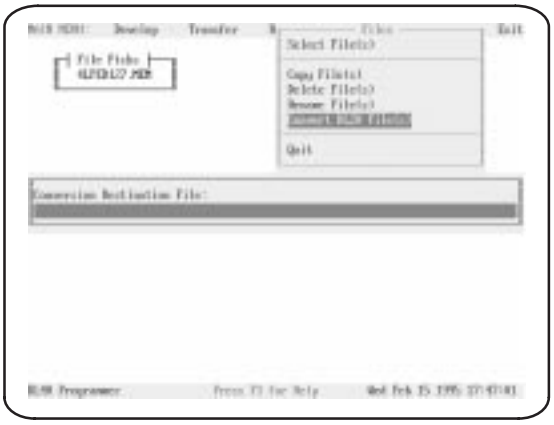

Convert DL20 files for use with a DL40

PLC-5 Remote I/O PassThrough Via DH+

PLC-5 Remote I/O PassThrough allows you to upload and download message files from a computer to a DL40 connected by remote I/O to a programmable Logic Controller on the DH+ link. There is no need to connect separate wiring from the computer to the DL40. PassThrough is available only on Series D or higher DL40 message displays. A summary of compatible PLCs appears on page 2 – 11.

Figure 2.2
Remote I/O PassThrough via DH+

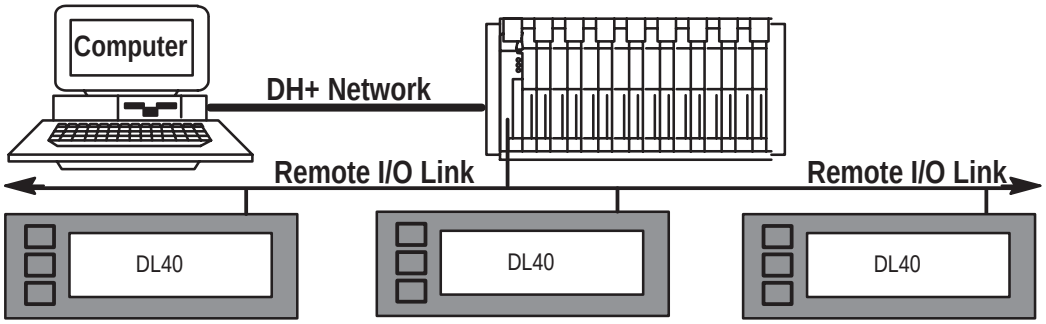

PLC-5E Remote I/O PassThrough Via Ethernet

PLC-5E Remote I/O PassThrough allows you to upload and download message files from a computer to a DL40 connected by remote I/O to a programmable Logic Controller on the Ethernet link. There is no need to connect separate wiring from the computer to the DL40. PassThrough is available only on Series D or higher DL40 message displays. A summary of compatible PLCs appears on page 2 – 11.

Figure 2.3
Remote I/O PassThrough via Ethernet

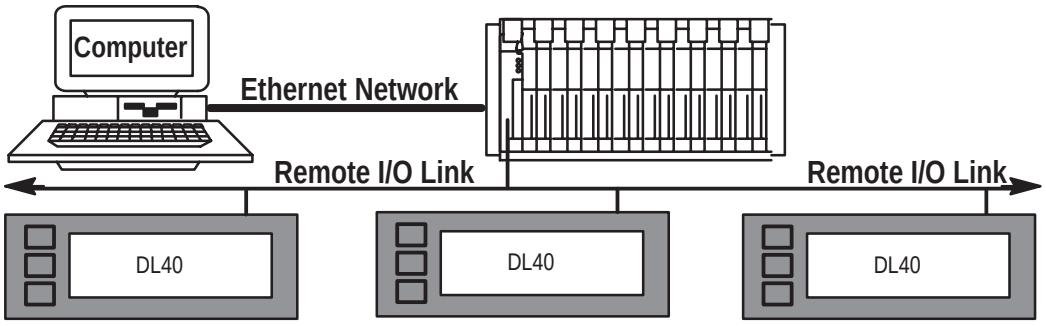

Support for Extended ASCII Character Set

The extended ASCII character set allows you to create messages in alternate languages such as French, German, Italian, and Spanish with the Offline Programming Software (Revision 2.0 or greater) and displayed on a DL40 (Revision 2.0 or greater).

Allen-Bradley Parts

Onboard Editor

The onboard editor lets you create or edit messages, select message attributes, and set options and variable formats on a Version 2.00 or later DL40 message display using any of a number of standard keyboards.

Send ASCII Data to a PLC Via a Remote I/O Link

Using Remote I/O communications, you can send ASCII data to your PLC. Simply attach an IBM compatible keyboard to the DL40 message display, and you can enter parts numbers, badge numbers, and similar information as required. The DL40 processes and displays the information, and then sends it on to the controller.

You can enter bar code data using a wedge attached to an Allen-Bradley bar code scanner. The DL40 displays scanned bar code information, then sends the data to the PLC through the Remote I/O. Refer to Publications 2755-824 and 2755-824.1 for information on applications using Allen-Bradley wedges.

You can establish similar communications over an RS-485 link.

Communications with Any Programmable Controller (Parallel Port Version)

The DL40 can accept information from any programmable controller over a total of 20 input lines (16 data and 4 strobe lines).

Parallel Port versions of the DL40 also have a 12 VDC terminal that can be used to power outputs that pull data and strobe lines high.

Backup Operations

You can archive DL40 applications files in a number of ways.

Table 2.B
Backup options by configuration

Backup Medium	DL40	DL40 w/Offline Programming Software
Allen-Bradley plug-in memory module Cat. No. 2706-NMM16 (16K byte) Cat. No. 2706-NMM32 (32K byte) Cat. No. 2706-NMM64 (64K byte)	Yes	No
Personal computer hard disk	No	Yes
Floppy disk or micro diskette	No	Yes
Tape on Allen-Bradley data recorder Cat. No. 1770-SA Cat. No. 1770-SB	Yes	Yes

Historical Events Stack

With the DL40's *Historical Events Stack* you can record the occurrence and sequence of some or all of the messages or variable data values that have been triggered and/or displayed. The 16K bytes of memory available for this record will hold about 1,000 events. You can view this record on the DL40 itself, or obtain a printout for offline reference.

Clock Operations

The DL40 contains a real-time battery-backed clock that will keep accurate time even when power is removed from the unit. The DL40 can display the current time and/or date in either AM/PM or 24-hour military format.

Date and time information can be displayed as part of any triggered message, and passed on to a PLC. You can also date- or time-stamp events as they are recorded in the Historical Events Stack.

You can set the DL40 internal clock from the front panel menus, from a PLC, or through the Offline Programming Software.

RS-232 and RS-485 Ports

The DL40 has both an RS-232 and RS-485 port.

The RS-232 port can be used to:

- upload or download message files from a computer
- print messages and/or Historical Event Stack contents
- upload or download message files using a data (tape) recorder

The RS-485 port can be used to:

- trigger messages with or without variable data content
- multi-drop upload or download message files from a personal computer
- send messages to slave message displays
- input ASCII data via keyboard or wedge

Debug Mode (Parallel Port Version)

The DL40 allows you to display the binary status (1 or 0 value) of both the strobe and data lines to check the output of a programmable controller.

Allen-Bradley Parts

Auxiliary Devices

You can connect a variety of useful auxiliary devices to the DL40 message display as needed to meet your own unique needs.

- **Slave displays.** You can address up to 126 DL10 or DL50 slave displays over an RS-485 network at distances up to 2,500 feet (762 m) from the originating DL40. You can also control the annunciation relay on remote DL50 Series slave displays. By assigning a specific address to each slave display, you can control which slaves receive and display a given message.
- **Printers.** A serial printer allows you obtain a hard copy of the Historical Events Stack or a listing of the internal application file itself. The time and date that a message was triggered can be included on the stack printout if you so desire. You can also set message attributes so that triggered messages will be sent via RS-232 immediately to the printer.
- **Alarms.** The alarm relay permits an external remote alarm or warning light to be activated and deactivated. Individual message attributes can be set to energize or de-energize the alarm relay contacts

ATTENTION: The DL40 alarm relay should be used for annunciation purposes only. It may **not** be used for control applications.

Background Messages

You can specify a *background message* that will be displayed whenever the DL40 has no other triggered messages in the queue to run.

Hidden Messages

You can also create *hidden messages* which will not appear on the DL40 display or have any affect on what is being displayed, but can be sent to a slave display, printed, or stored on the Historical Events Stack.

Embedded Variables

The messages you create on the DL40 can contain *variable data* in response to changing data input. Incoming variable data can be binary, BCD (*binary coded decimal*), and/or ASCII. You can also embed time and date information in a message from the DL40's internal battery-backed real-time clock.

Data Mode Selection

When using the DL40 message display, you can select from two data modes

- binary
- Binary Coded Decimal (BCD) either signed or unsigned

Within any application, triggers and variable data can be in either form. For example, message triggers can be in a binary format, while variable data can be BCD.

Message Chaining

The DL40 allows you to create a chain of messages for display in sequence. Only the first event in the chain need be triggered from outside. Then each message in the chain can trigger the next until the complete sequence has run.

Adjustable Parameters for Serial Communications

With the DL40 you can configure RS-232 or RS-485 port parameters as needed for compatibility with printers, data recorders, slave displays, or control computers. Configurable parameters include:

- **Baud Rate.** Available baud rates include:
  300 4800
  1200 9600
  2400 19200
- **Parity.** You can transmit data with:
  Odd parity
  Even parity
  No parity
- **Handshake.** You can choose from:
  Software
  Hardware
  None
- **Data Bits per Character.** Either 7 or 8
- **Null Count.** From 0 to 255. This setting allows you to send a string of nulls to the printer between characters. It is useful with slower printers that drop characters because they can't keep up with normal DL40 output.
- **Page Width.** Between 20 and 132 characters

Allen-Bradley Parts

Operating Modes

The DL40 Message Display offers a number of operating modes from which to choose. Each provides you with the tools you need to perform a different set of functions. The following paragraphs and the tables that accompany them provide a brief overview of the various operating mode options available to you.

Run Mode

Run Mode is the normal operating mode for the DL40. In Run Mode messages are triggered for display on the DL40 and (if desired) on slave message displays.

The Remote I/O version of the DL40 always comes up in the Run Mode after reset. The Parallel Port version does, too, *except* when the message display's Run Mode/Debug DIP switch is set to Debug.

Remote I/O DL40s offer four types of Run Modes:

- Message/Variable/Slave
- Message/Variable
- Message List
- Bit Trigger

Parallel Port DL40s offer two types of Run Modes:

- Message/Variable/Slave
- Message List

You can select the type of run mode you want as an *Option* using the Onboard Editor or Offline Programming Software.

Other Operating Modes

In addition to the Run Modes described above, the DL40 offers the following operating modes:

- Help Mode
- Historical Recall Mode
- Remote Program Mode
- Backup Mode
- Set RS-232/RS-485 Port Mode
- Clock Mode
- Print Mode
- Debug Mode (on parallel port versions only)

Note that you will use the Remote Program Mode whenever you use the Offline Programming Software.

Special Messages

Triggering Special Messages gives you the ability to monitor and control certain functions of the DL40 without leaving Run Mode. These messages normally occupy Message Numbers 901 to 916. You can move Special Messages to Message Number 1 to 16, or disable them with the Offline Programming Software or Onboard Editor. You will find a complete explanation of Special Messages in Chapter 5.

Special Messages include:

Table 2.C
Summary of Special Messages

Message Number	Content
901 (or 01)	Terminate Message – Clear Display
902 (or 02)	Clear Queue
903 (or 03)	Terminate Message – Clear Display and Queue
904 (or 04)	Reset Unit
905 (or 05)	Test Display
906 (or 06)	Print Historical Events Stack – Chronological Order
907 (or 07)	Print Historical Events Stack – Frequency of Occurrence
908 (or 08)	View Historical Events Stack
909 (or 09)	Clear Historical Events Stack
910 (or 10)	Set Interactive Clock
911 (or 11)	Set Clock with Variable Data
912 (or 12)	Send Time to PLC①
913 (or 13)	Send Date to PLC①
914 (or 14)	View Display Parameters
915 (or 15)	Stop Special Messages/Resume Run Mode
916 (or 16)	Set Display Intensity

① Remote I/O versions only

System Requirements for Remote I/O Without PassThrough File Transfers

The following is a list of PLCs and SLCs that are applicable for Remote I/O communications with the DL40 message display.

- PLC-5/11, 5/15①, 5/20, 5/25, 5/30, 5/40, 5/60, 5/250
- PLC-2, PLC-5/10, 5/12 with Catalog Number 1771-SN Scanner
- SLC-5/02, 5/03, 5/04 with Catalog Number 1747-SN Scanner②

① If you are using a PLC-5/15 with partial rack addressing and block transfers, you must use Series B, Rev. J or later.

② Block Transfer requires a Series B or later Scanner.

Allen-Bradley Parts

System Requirements for Remote I/O PassThrough Using DH+

The following tables list the Allen-Bradley PLCs and computer interface boards that are applicable for PassThrough file transfers with the DL40 message display over a DH+ link as of this printing.

Table 2.D
Applicable PLC types for PassThrough file transfers over DH+

PLC Types	Series	Revision
PLC-5/11	All	All
PLC-5/15	B	N or later
PLC 5/20	All	All
PLC 5/25	A	J or later
PLC 5/30	A	B or later
PLC 5/40	A B	E or later
PLC 5/60	A B	B or later
PLC 5/80	All	All
PLC 5/250	All	All

Table 2.E
Applicable interface boards and modules for PassThrough file transfers over DH+

Catalog No.	Description
1784-KT	$^1/_2$-slot interface board
1784-KTX	$^1/_2$-slot interface board
1784-KL	Interface board for Allen-Bradley 1784-T45 or -T47
1784-KT2	Interface module for IBM PS2
1770-KF2	Serial to DH+ interface module
1784-PCMK	PCMCIA interface board①

① Requires 2706-ND1 Series D Ver 3.0, which includes Interchange drivers.

System Requirements for Remote I/O PassThrough Using Ethernet

The following table lists the Allen-Bradley PLCs that are applicable for PassThrough file transfers with the DL40 message display over an Ethernet link as of this printing.

Table 2.F
Applicable PLC types for PassThrough file transfers over Ethernet

PLC Types	Series	Revision
PLC 5/40E	A B	E or later
PLC 5/60E	A B	B or later
PLC 5/80E	All	All
PLC 5/250	All	All

Use one of the Allen-Bradley Ethernet computer interface boards (or its equivalent) for PassThrough file transfers.

- Catalog Number 6628-A5
- Catalog Number 6628-A7

Catalog Numbers

DL40 Message Displays are available with varying amounts of memory in either two- or four-line versions.

Table 2.G
Product Identification and Catalog Numbers

Description	Memory Size	Remote I/O Communication Version Catalog Number	Parallel Communication Port Versions Catalog Number
Two Line Display	16 K Message Memory	2706–E23J16B1	2706–E23J16
Two Line Display	32 K Message Memory	2706–E23J32B1	2706–E23J32
Four Line Display	32 K Message Memory	2706–E43J32B1	2706–E43J32
Four Line Display	64 K Message Memory	2706–E43J64B1	2706–E43J64
Four Line Display	128 K Message Memory	2706–E43J128B1	2706–E43J128

Compatible Keyboards

The following keyboards are compatible with the DL40 Message Display.

Table 2.H
Applicable keyboards for use with the DL40 Message Display

Catalog No.	Description
6120 & 6121	Allen-Bradley industrial computer standard keyboards
1784-T50	Allen-Bradley industrial terminal keyboard
1784-T60	Allen-Bradley industrial terminal keyboard
	IBM-PC or compatible -XT, -AT standard keyboard
	IBM-PC or compatible -PC enhanced keyboard

NOTE: When used with the DL40, the Num Lock and Caps Lock indicators will not illuminate. We recommend you use the 1784-T60 terminal keyboard with Num Lock turned off.

Allen-Bradley Parts

Options & Accessories

The following options and accessories are available from Allen-Bradley for the DL40 message display.

Table 2.I
Options and accessories for the DL40 message display

Item	Description	Catalog No.
Offline Programming Software	Three $3^1/_2$ inch micro diskettes	2706-ND1
Memory Modules	Solid state backup for files and messages 16 Kbyte 32 Kbyte 64 Kbyte	2706-NMM16 2706-NMM32 2706-NMM64
Communication Cables	For connecting the DL40 to a range of PCs, converters, and recorders. **Refer to Appendix B for detailed information on cables.**	2706-NC12 2706-NC13 2706-NC14 2706-NC15
120 Volt Parallel Input Converter	Converter to connect 120 VAC input voltages to parallel input port (2 required for each DL40)	2706-NG2
NEMA Enclosure	NEMA Type 12/13 enclosure complete with mounting holes and cutout for one DL40 display. Access door is gasketed. Enclosure for two-line DL40 Enclosure for four-line DL40	 2706-NE1 2706-NE2
Keyboard Front Panel Access Kit	Panel mount 8-pin DIN keyboard connecter, NEMA 4 panel access cover, keyboard extension cable	2706-NKAK1
RS-232 Front Panel Access Kit	Panel mount 9-pin D shell connector, NEMA 4 panel access cover, DL40 RS-232 extension cable	2706-NDAK2

Chapter 3

The Run Mode – Remote I/O

This chapter describes the operations of the Run Mode for the Remote I/O version of the DL40. It also describes the use of Special Messages. Refer to Chapter 4 for information on the Run Mode for Parallel versions of the DL40. See Chapter 6 for information on other operating modes.

Overview

Run Mode is the normal operating mode for the DL40. In Run Mode, messages are triggered for display on the DL40 and (if desired) on slave message displays.

The Remote I/O version of the DL40 always comes up in the Run Mode after reset.

Remote I/O DL40s offer four types of Run Modes:

- Message/Variable/Slave
- Message/Variable
- Message List
- Bit Trigger

You can select the type of run mode you want as an *Option* using the Onboard Editor or Offline Programming Software. Table 3.A provides an overview of the differences among Run Mode Types.

Important: A message completes running when either:

- the Wait Time expires
- message is acknowledged
- message completes printing
- message is sent to slave(s)
- handshaking is complete
- all ASCII Input Data is entered

Allen-Bradley Parts

Table 3.A
Summary of Remote I/O Run Mode Types

Feature	Message/Variable/Slave Run Mode	Message/Variable Run Mode	Message List Run Mode	Bit Trigger Run Mode
Trigger messages	Trigger a message with 1 to 40 variables, depending on rack size, trigger method, and variable type		Triggers a message list of up to 20 messages in Round Robin Order	Triggers a Priority Message and up to 496 messages in Priority and/or Round Robin Order
Triggering method	● 1/4 rack – Block Transfer only ● 1/2, 3/4, full rack – Discrete I/O or Block Transfer ● Keyboard ● RS-485 link	● Discrete I/O or Block Transfer ● Keyboard Port ● RS-485 link		● Discrete I/O or Block Transfer ● Keyboard (for Priority Message only) ● RS-485 link (for Priority Message only)
Send messages to slave display	Slave address for each message can be specified with message trigger. (Overrides address specified as Message Attribute)	Slave address specified as a Message Attribute		
Send variables to place in message	● Up to 10 (16 bit) binary or (4 digit) BCD ● Up to 20 (8 bit) ASCII ● Up to 40 (4 bit) BCD		No	
Variable types	Binary – Signed and Unsigned BCD ASCII		Not Applicable	
Handshaking	Yes			
Diagnostic code sent to PLC	Yes			
Message acknowledgement	Yes			
Input and display of ASCII input data (via keyboard port)	Up to 20 ASCII characters			
Return ASCII input data to PLC via Remote I/O port	● Discrete I/O – Up to 12 characters, depending on rack size ● Block Transfer – Up to 20 characters, independent of rack size			No
Return ASCII input data via RS-485 port	Up to 20 characters, independent of rack size			
Put message on Historical Events Stack	Yes			

Message/Variable/Slave Run Mode

In the Message/Variable/Slave Run Mode you can:

Trigger Messages Via a PLC Using the Remote I/O Port

You can trigger a single message by either discrete I/O or a Block Transfer Write. See Chapter 10 for more information.

Trigger Messages Via the Keyboard Port Or the RS-485 Port

See Chapter 8 for more information.

Send Variables to be Included In Message

Your PLC can include variables with the message trigger. Up to the equivalent of 6 full word variables can be sent if using Discrete I/O (depending on rack size) or up to the equivalent of 10 full word variables can be sent using a Block Transfer Write (independent of rack size). See Chapter 10 for more information.

Variable types include:

- 16 bit binary (1 variable per word)
- 8 bit ASCII (2 per word)
- 4 digit *signed* Binary Coded Decimal (BCD) (1 per word)
- 1 digit (4 bit) *unsigned* BCD (4 per word)

You can send variables via an RS-485 link or the DL40 Keyboard Port. See Chapter 8 for more information.

Insert ASCII Input Data Into a Message

Use the DL40 Keyboard Port to input ASCII data intended for display.

- A request for ASCII Input Data can be placed in a message by inserting a [CTRL][X]. See Chapter 6 for more information.
- Up to l20 ASCII characters can be requested for each message triggered using Discrete I/O or Block Transfer Write.
- Requests for ASCII data can be strung together to form inputs up to 20 ASCII characters long.
- While a message is running, enter the ASCII character or string of ASCII characters followed by a [↵].

See Chapter 8 for more information.

Return ASCII Input Data to a PLC

Via Remote I/O

Up to 12 ASCII characters (depending on rack size) are returned via Discrete I/O. Up to 20 ASCII characters are returned via Block Transfer Read.

When all required ASCII data has been entered, the message will time out and the Enter Bit in the Input Image Table will be set. It is only after this bit

Allen-Bradley Parts

is set that the data should be considered valid. See Chapter 10 for more information.

Via RS-485 Port

Up to 20 ASCII characters (independent of rack size) are returned via the RS-485 Port. See Chapter 8 for more information.

Return the Message Number of the Message Being Run to a PLC

This is automatically done in the Remote I/O scan. See Chapter 10 for more information.

Send Real Time Clock Or Date Data to a PLC

- Triggering Special Message 912 (or 12) will cause the DL40 to send clock data to a PLC.
- Triggering Special Message 913 (or 13) will cause the DL40 to send date data to a PLC.

Information on Special Messages appears in Chapter 5. See Chapter 7 for more information on formatting time and date data.

Put Messages on Historical Events Stack

Both triggered messages and variable data can be put on the 16 Kbyte Historical Events Stack. The contents of the stack can be viewed on the DL40 display or printed:

- in chronological order
- by number or occurrences

See Chapter 6 for more information.

Require Handshake Between DL40 and PLC

Handshaking provides an indication to the sender (either the DL40 or the PLC) that Image Table Data was received. See Chapter 10 for more information.

Override Slave Address Selected as a Message Attribute with an Address Sent with the Message Trigger

Note: For this mode only, if your DL40 is configured as a $^1/_4$ rack device, you must specify the slave address as a Message Attribute.

To send **any** message to a slave, Port Use of the RS-485 Port must be set to DL Slaves. See Chapter 4.

Message/Variable Run Mode

Message/Variable Run Mode can only be selected via the Offline Programming Software. It is the same as the Message/Variable/Slave Run Mode except:

- You cannot override the slave address selected as a Message Attribute.
- Your PLC can send up to the equivalent of 7 (not 6) full word variables if using discrete I/O.

Message List Run Mode

In the Message List Run Mode you can:

Create a List of Messages that is Continuously Displayed

The list is created by *adding* message numbers to the list while the DL40 is in the Run Mode. See Chapter 10 for information for *adding* (or *deleting)* messages via the Remote I/O Port. See Chapter 8 for additional information for *adding* (or *deleting)* messages via the RS-485 Port or the Keyboard Port.

Important: The Message List will be lost if you leave the Run Mode, *reset* the DL40, or cycle power. You will have to create a new list when you re–enter the Run Mode. In addition:

- Messages are displayed in the order they are put on the list.
- Messages can be added to or deleted from the list while the list is running.
- Messages are always added to the end of the list. If a message is deleted and re-added to the list, it will be re-added to the end of the list.
- You can send a Priority Message Number via the Remote I/O, RS-485, or Keyboard port which is queued as in the Message/Variable/ Slave Run Mode. When the message that is currently displayed finishes running, all Priority Messages in the queue will be run. After queued messages complete running, the DL40 resumes running the Message List.

Note: Unlike the Message/Variable/Slave Run Mode, you cannot send variables to be included in a message.

Insert ASCII Input Data into a Message

Same as Message/Variable/Slave Run Mode.

Allen-Bradley Parts

Return ASCII Input Data to a PLC

Same as Message/Variable/Slave Run Mode; however, see Chapter 10 for more information.

Return the Message Number of the Message Being Run to a PLC

This is automatically done in the Remote I/O scan. See Chapter 10 for more information.

Send Real Time Clock Or Date Data to a PLC

Same as Message/Variable/Slave Run Mode; however, see Chapter 10 for more information.

Put Messages on the Historical Events Stack

Same as Message/Variable/Slave Run Mode but includes entries for adding or deleting messages.

Note: If the message's Historical Events Stack attribute is set, message data will be put on the stack once for each time the message is displayed or redisplayed.

Send Message to the Slave Address Selected as a Message Attribute

See Chapter 7 for more information.

Note: To send any message to a slave, Port Use of the RS-485 Port must be set to DL Slaves. Refer to Chapter 6 for more information.

Note: If the message's Print attribute is set, the message will be printed once for each time it is displayed or redisplayed.

Bit Trigger Run Mode

In the Bit Trigger Run Mode you can:

Trigger Message by Sending a Bit Trigger Table

It takes only a single bit (set) to trigger a message. The position of a bit (in the Bit Trigger Table) corresponds to a message number. That is, bit 00 of WORD 1 corresponds to Message Number 1; bit 01 of WORD 1 corresponds to Message Number 2; etc. The total number of messages that can be triggered depends on rack size allowed:

Communications Method	Words	Consisting Of
Discrete I/O – 1/4 Rack	17	1 word & Priority Message
Discrete I/O – 1/2 Rack	49	3 words & Priority Message
Discrete I/O – 3/4 Rack	81	5 words & Priority Message
Discrete I/O – Full Rack	113	7 words & Priority Message
Block Transfer	497	31 words & 1 Priority Message

See Chapter 10 for more information.

Note: Unlike the Message/Variable/Slave Run Mode, you cannot send variables to be included in a message.

The Bit Trigger table has three sections (all three sections are sent with a single transfer):

Priority Message Number Section

When a priority message trigger is received (via Remote I/O, RS-485 or Keyboard Port), it is queued as in the Message/Variable/ Slave Run Mode.

When the message that is currently displayed finishes running, all Priority Messages in the queue will be run.

- If no bits in either the Priority Section or the Round Robin section have been changed, the DL40 will return to where it left off (in either section) and resume running messages.
- If any bit in either the Priority Section or the Round Robin section has been changed, the DL40 will return to the start of the Priority Section to resume running messages.

The Priority message can be any message even a Special Message. Send the number of the message you want to trigger in the Priority Message Number Section of the Bit Trigger Table. See page 10-24. If you don't want to trigger a priority message, leave this part of the table empty (i.e. = 0).

Priority Section

Messages in this section are prioritized, starting with Message Number 1 (corresponding to bit 00 of Word 1). This message has the highest priority. The message with the highest priority (that has its corresponding bit set) will be displayed first. After the highest priority message has completed running, the message with the next highest priority (with its bit set) will be displayed. The DL40 will continue to run through the Priority Section displaying messages until the message corresponding to the last set bit in this section has been displayed.

Messages are displayed only once for each change to the Bit Trigger table. If an updated table (with a new Priority Message Number or at least one bit in either the Priority Section or the Round Robin Section changed) is sent to the DL40, the messages of the new Bit Trigger Table will begin to run immediately even if messages in the old Bit Trigger Table were not run. It is

Allen-Bradley Parts

possible that messages with low priorities may never be displayed. After the DL40 has displayed all the messages in the Priority Section (with bits set), the messages in the Round Robin Section will be displayed.

Note: The size (in words) of the Priority Section is set with the Onboard Editor or with the Offline Programming Software.

Round Robin Section

Messages with trigger bits set in this section will be run after the Priority Message and **all** messages in the Priority Section with bits set have been run. The DL40 will run through this section displaying messages. After the last message in this section has been displayed, the DL40 will go back to the first message (in this section) and start again. Messages will continue to run until an updated Bit Trigger Table is sent. After all priority messages in the updated Bit Trigger Table have been run, the DL40 will return to where it left off in the Round Robin Section and continue on from there.

Length of the Round Robin Section in (16 bit) words is:

- the length of the Bit Trigger Table – 32 words
- minus the Priority Message – 1 word
- minus the Length of the Priority Section – X words

Note: The lengths of the Priority Message, the Priority Section, and Round Robin Section are **always** in full (16 bit) words.

For example, If the Priority Section is 9 words long, then the length of the Round Robin Section would be:

	32 words
	–1 word
	–9 words
=	22 words

In this mode, you can also:

Return the Message Number of the Message Being Run to a PLC

This is automatically done in the Remote I/O scan.

Insert ASCII Input Data into a Message

Same as Message/Variable/Slave Run Mode; except only returns data to a PLC via RS-485 Port.

Note: If the message Historical Event Stack Attribute is set, data is put on Historical Events Stack.

Send DL40's Real Time Clock or Date Data to a PLC

Same as Message/Variable/Slave Run Mode; however, see page 10-26 & 27 for more information.

Put Messages on the Historical Events Stack

Same as Message/Variable/Slave Run Mode but, in addition, the Bit Image Table is put on the stack each time it is changed regardless of whether or not the stack attribute is set.

Note: If the message's Historical Events Stack attribute is set, message data will be placed on the stack

Send Messages to the Slave Address Specified as a Message Attribute

Refer to Chapter 4 for information.

Note: If the message's print attribute is set, the message will be printed once for each time it is displayed or redisplayed.

Note: To send **any** message to a slave, Port Use of the RS-485 Port must be set to DL Slaves. Refer to Chapter 6 for more information.

Allen-Bradley Parts

Chapter 4

The Run Mode – Parallel Port

This chapter describes the operations of the Run Mode for the Parallel Port version of the DL40. Refer to Chapter 3 for information on the Run Mode for Remote I/O versions of the DL40. See Chapter 6 for information on other operating modes. Refer to Chapter 9 for additional technical information on using the parallel port.

Overview

Run Mode is the normal operating mode for the DL40. In Run Mode, messages are triggered for display on the DL40 and (if desired) on slave message displays.

The Parallel Port version of the DL40 always comes up in the Run Mode after reset, *except* when the message display's Run Mode/Debug DIP switch is set to Debug.

Parallel Port DL40s offer two types of Run Modes:

- Message/Variable/Slave
- Message List

You can select the type of run mode you want as an *Option* using the Onboard Editor or Offline Programming Software. Table 4.A provides an overview of the differences between Run Mode Types.

Table 4.A
Summary of Parallel Port Run Mode Types

Feature	Message/Variable/Slave Run Mode	Message List Run Mode
Trigger messages	Trigger a message with 1 to 40 variables, depending on trigger method and and variable type	Triggers a message list of up to 20 messages in Round Robin Order
Send messages to slave display	Slave address for each message can be specified with message trigger. (Overrides address specified as Message Attribute)	Slave address specified as a Message Attribute
Send variables to place in message	● Up to 10 (16 bit) binary or (4 digit) BCD ● Up to 20 (8 bit) ASCII ● Up to 40 (4 bit) BCD	No
Variable types	Binary – Signed and Unsigned BCD ASCII	Not Applicable
Message acknowledgement	Yes	
Input and display of ASCII input data (via keyboard port)	Up to 20 ASCII characters	
Return ASCII input data via RS-485 port	Up to 20 characters	
Put message on Historical Events Stack	Yes	

Message/Variable/Slave Run Mode

In the Message/Variable/Slave Run Mode you can:

Trigger Messages Via the Parallel Port

You can trigger a single message. See Chapter 9 for more information.

Trigger Messages Via the Keyboard Port or the RS-485 Port

See Chapter 9 for more information.

Send Variables to be Included In Message

Your PLC can include variables with the message trigger. Up to the equivalent of 10 full word variables can be sent with the message trigger.

Variable types include:

- 16 bit binary (1 variable per word)
- 8 bit ASCII (2 per word)
- 4 digit *signed* Binary Coded Decimal (BCD) (1 per word)
- 1 digit (4 bit) *unsigned* BCD (4 per word)

Allen-Bradley Parts

Insert ASCII Input Data Into a Message

Use the DL40 Keyboard Port to input ASCII data intended for display.

- A request for ASCII Input Data can be placed in a message by inserting a [CTRL][X]. See Chapter 5 for more information.
- Up to l20 ASCII characters can be requested for each message triggered using Discrete I/O or Block Transfer Write.
- Requests for ASCII data can be strung together to form inputs up to 20 ASCII characters long.
- While a message is running, enter the ASCII character or string of ASCII characters followed by a [↵].

Return ASCII Input Data to a PLC

Up to 20 ASCII characters are returned via the RS-485 Port.

Put Messages on Historical Events Stack

Both triggered messages and variable data can be put on the 16 Kbyte Historical Events Stack. The contents of the stack can be viewed on the DL40 display or printed:

- in chronological order
- by number or occurrences

Override Slave Address Selected as a Message Attribute with an Address Sent with the Message Trigger

To send **any** message to a slave, Port Use of the RS-485 Port must be set to DL Slaves. See Chapter 6.

Message List Run Mode

In the Message List Run Mode you can:

Create a List of Messages that is Continuously Displayed

The list is created by *adding* message numbers to the list while the DL40 is in the Run Mode. See Chapter 8 for additional information for *adding* (or *deleting)* messages via the RS-485 Port or the Keyboard Port.

Important: The Message List will be lost if you leave the Run Mode, *reset* the DL40, or cycle power. You will have to create a new list when you re–enter the Run Mode. In addition:

- Messages are displayed in the order they are put on the list.

- Messages can be added to or deleted from the list while the list is running.
- Messages are always added to the end of the list. If a message is deleted and re-added to the list, it will be re-added to the end of the list.
- You can send a Priority Message Number which is queued as in the Message/Variable/ Slave Run Mode. When the message that is currently displayed finishes running, all Priority Messages in the queue will be run. After queued messages complete running, the DL40 resumes running the Message List.

Note: Unlike the Message/Variable/Slave Run Mode, you cannot send variables to be included in a message.

Put Messages on the Historical Events Stack

Same as Message/Variable/Slave Run Mode but includes entries for adding or deleting messages.

Note: If the message's Historical Events Stack attribute is set, message data will be put on the stack once for each time the message is displayed or redisplayed.

Send Message to the Slave Address Selected as a Message Attribute

See Chapter 7 for more information.

Note: To send any message to a slave, Port Use of the RS-485 Port must be set to DL Slaves. See Chapter 6 for more information.

Note: If the message's Print attribute is set, the message will be printed once for each time it is displayed or redisplayed.

Allen-Bradley Parts

Chapter 5

Special Messages

This chapter describes the use of Special Messages with both the Remote I/O and Parallel Port versions of the DL40.

Triggering Special Messages gives you the ability to monitor and control certain functions of the DL40 while remaining in the Run Mode. These messages normally occupy Message Numbers 901 to 916. You have the ability to move Special Messages to Message Numbers 1 to 16 or to disable them using the Onboard Editor or Offline Programming Software.

Special Messages include:

Table 5.A
Summary of Special Messages

Message Number	Content
901 (or 01)	Terminate Message – Clear Display
902 (or 02)	Clear Queue
903 (or 03)	Terminate Message – Clear Display and Queue
904 (or 04)	Reset Unit
905 (or 05)	Test Display
906 (or 06)	Print Historical Events Stack – Chronological Order
907 (or 07)	Print Historical Events Stack – Frequency of Occurrence
908 (or 08)	View Historical Events Stack
909 (or 09)	Clear Historical Events Stack
910 (or 10)	Set Interactive Clock
911 (or 11)	Set Clock with Variable Data
912 (or 12)	Send Time to PLC①
913 (or 13)	Send Date to PLC①
914 (or 14)	View Display Parameters
915 (or 15)	Stop Special Messages/Resume Run Mode
916 (or 16)	Set Display Intensity

① Remote I/O versions only

901 (or 01) Terminate Message – Clear Display

Immediately terminates message that is running and clears the DL40's display.

If there is a message in the queue, that message will start running immediately after the previous message is terminated.

If a terminated message is being sent to a printer and/or a slave, the message is terminated after the current line being sent to the printer or slave is completed.

Note: Special Message 901 will not terminate a message being displayed on a slave unit. You must send another message to the slave for display or cycle power to slave.

Note: The following Special Messages will complete their functions before this Special Message takes effect: 901-905, 909, 912, 913, 915, 916.

902 (or 02) Clear Queue

Immediately clears the queue. If a message is running it will finish running.

903 (or 03) Terminate Message – Clear Display and Queue

Immediately terminates message that is running and clears the DL40's display and the message and variable data queue.

If a terminated message is being sent to a printer and/or a slave, the message is terminated after the current line being sent to the printer or slave is completed. **Note:** Special Message 903 will not terminate a message being displayed on a slave unit. You must send another message to the slave for display or cycle power to slave.

Note: The following Special Messages will complete their functions before this Special Message takes effect: 901-905, 909, 912, 913, 915, 916.

904 (or 04) Reset Unit

Causes the DL40 to immediately go through its normal power-up sequence. This aborts all other functions of the DL40.

Note: Special Message 904 will not terminate a message being displayed on a slave unit. You must send another display message to the slave or cycle power to the slave.

905 (or 05) Test Display

Turns all elements of the display on for 2 seconds.

This message will be put at the end of the queue and will only be run after all messages before it have been run.

906 (or 06) Print Historical Events Stack – Chronological Order

Sends messages that have been placed on the Historical Events Stack out the RS-232 port to a printer. The printout will use the Chronological Format as described in Historical Recall.

Allen-Bradley Parts

This Special Message does not clear the Historical Events Stack. After completion of the printout, the DL40 returns to Run Mode.

To cancel the printout:

- Trigger Special Message 901, 903, 904, or 915
- From keyboard–press [ESC]
- From front panel–press [MSG ACK]
- Exit the Run Mode

This message will be put at the end of the queue and will only be run after all messages before it have been run.

907 (or 07) Print Historical Events Stack – Frequency of Occurrence

Sends messages that have been placed on the Historical Events Stack out the RS-232 port to a printer. The printout will use the Number of Occurrences Format as described in Historical Recall.

This Special Message does not clear the Historical Events Stack. After completion of the printout, the DL40 returns to Run Mode.

To cancel the printout:

- Trigger Special Message 901, 903, 904, or 915
- From keyboard–press [ESC]
- From front panel–press [MSG ACK]
- Exit the Run Mode

This message will be put at the end of the queue and will only be run after all messages before it have been run.

908 (or 08) View Historical Events Stack

Displays messages that have been placed on the Historical Events Stack, but does not clear the Historical Events Stack. Messages are displayed one at a time in Chronological Order as described in Historical Recall. To see the next message on the stack, press any key on keyboard or [SELECT] or [↵] push button.

After last message DL40 will display:

END OF H.E. STACK PRESS ANY KEY

This message will be put at the end of the queue and will only be run after all messages before it have been run.

Press any key on the keyboard or [SELECT] or [↵] push button to return the DL40 to the run mode

Note: After one minute, the DL40 will automatically return to the Run Mode.

To cease viewing the stack:

- Trigger Special Message 901, 903, 904, or 915
- From keyboard–press [ESC]
- From front panel–press [MSG ACK]
- Exit the Run Mode

909 (or 09) Clear Historical Events Stack

This Special Message clears the Historical Events Stack of all messages put on the stack before it was run. This message will be put at the end of the queue and will only be run after all messages preceding it have been run.

Important: Once this message is running, it cannot be stopped. If it has not yet started to run, it can be stopped by triggering Special Message 902.

910 (or 10) Interactive Clock Setting

This Special Message allows you to set the clock while the DL40 is in the Run Mode. Having received this message, the DL40 displays the current time and date, and allows you to use message triggers to change the current values.

If you trigger Message Number	The clock will
1	increment 1 second
129	decrement 1 second
2	increment 1 minute
130	decrement 1 minute
4	increment 1 hour
132	decrement 1 hour
8	increment 1 day
136	decrement 1 day
16	increment 1 month
144	decrement 1 month
32	increment 1 year
160	decrement 1 year
64	toggles AM–PM

If triggering a message puts clock/date data out of range, the message is ignored.

Allen-Bradley Parts

This message will be put at the end of the queue and will only be run after all messages before it have been run.

This message terminates and *retains* new settings if either:

- no new setting is received for 20 seconds
- Special Message 915 (Stop Special Message/Resume Run Mode) is triggered.

Message terminates and *loses* all new settings if either:

- Special Message 901, 903, or 904 is triggered
- Run Mode is Exited

911 (or 11) Set Clock with Variable Data

Sets clock with data sent as a variable. Functions only in Message/Variable and Message/Variable/Slave Run Modes since Message List and Bit Trigger Run Modes do not support variables.

Table 5.B
Setting clock with data sent as a variable

Variable Number	Contains	Acceptable Values
1	Minutes	0–59
2	Hours	1–12 or 0–23
3	Date	1–31
4	Month	1–12
5	Year	0–99
6	Mode	0=AM 1=PM 2=24 hr

Note on using Discrete I/O: Since the number of variables that can be sent depends on the rack size, small rack sizes cannot set all clock parameters.

This message will be put at the end of the queue and will only be run after all messages before it have been run.

This message terminates and *retains* new settings if either:

- no new setting is received for 20 seconds
- Special Message 915 (Stop Special Message/Resume Run Mode) is triggered.

Message terminates and *loses* all new settings if either:

- Special Message 901, 903, or 904 is triggered
- Run Mode is Exited

912 (or 12) Send Time To PLC (Remote I/O versions only)

Sends clock data to the PLC.

This message will be put at the end of the queue and will only be run after all messages before it have been run.

913 (or 13) Send Date to PLC (Remote I/O versions only)

Sends date data to the PLC.

This message will be put at the end of the queue and will only be run after all messages before it have been run.

914 (or 14) View Display Parameters

Causes DL40 to display operating parameters.

Operating Parameters

RS-232 Serial Port Baud Rate
RS-232 Serial Port Parity Setting
RS-485 Serial Port Baud Rate
RS-485 Serial Port Parity Setting
RS-485 Address
RS-485 Port Usage
DL40's Run Mode

External Application Module Status (Installed or Not Installed, and size)

Memory Available for Historical Events Stack
Memory Used by Historical Events Stack DL40's Rack Address (Remote I/O version only)
DL40's Starting I/O Group (Remote I/O version only)
DL40's Rack Size (Remote I/O version only)
Remote I/O Baud Rate (Remote I/O version only)
Block Transfers Enabled (Remote I/O version only)

After the last parameter, DL40 will return to Run Mode.

This message will be put at the end of the queue and will only be run alter all messages before it have been run.

To stop viewing parameters:

- Trigger Special Message 901, 903, 904, or 915
- From keyboard–press [ESC]
- From front panel–press [MSG ACK]
- Exit the Run Mode

Allen-Bradley Parts

915 (or 15) Stop Special Messages/Resume Run Mode

If one of the following Special Messages is running, Special Message 915 immediately terminates that message and clears the display. Does not affect Special Messages in the queue.

906	Print Historical Events Stack – Chronological Order
907	Print Historical Events Stack – Frequency of Occurrence
908	View Historical Events Stack
910	Interactive Clock Setting
911	Set Clock with Variable Data
914	View Display Parameters
916	Set Display Intensity

916 (or 16) Set Display Intensity

Sets intensity of the DL40 display to a value between 0 and 100% of full intensity. Default value after reset or power–up is 70%.

This message contains a single 16 bit variable with a valid domain of 0 to 100, which represents the desired display intensity level.

The DL40 will display:

% INTENSITY IS__ __ __ __

Only allows changes in Message/Variable and Message/Variable/Slave Run Modes since Message List and Bit Trigger Run Modes do not support variables.

Displays operating in Message List and Bit Trigger Run Modes cannot change intensity.

This message will be put at the end of the queue and will only be run after all messages before it have been run.

This message terminates and *retains* new settings if either:

- no new setting is received for 5 seconds
- Special Message 915 is triggered

Chapter 6

Other Operating Modes

This chapter describes DL40 message display operating modes *other than* the Run Mode. These include:

Run Mode(s)	See Chapters 3 and 4
Help Mode	See page 6 – 1
Historical Recall Mode	See page 6 – 1
Remote Program Mode	See page 6 – 6
Backup Mode	See page 6 – 6
Set RS-232/RS-485 Port Mode	See page 6 – 11
Clock Mode	See page 6 – 14
Print Mode	See page 6 – 16
Debug Mode (Parallel Port Version only)	See page 6 – 16

Help Mode

The Help Mode is entered by pressing [F1] on the keyboard.

- If entering the Help Mode from Run Mode, the DL40 displays a list of [CTRL] characters you can use to enter other modes.
- If entering the Help Mode from the Onboard Editor, the Help Mode lists [CTRL] characters used for editing messages.

Exit the Help Mode by pressing [ESC].

Historical Recall Mode

This mode lets you display the Historical Events Stack on the DL40 or send the contents of the stack to a printer via the RS-232 port. Enter the Historical Recall Mode by pressing [CTRL][S].

The Historical Events Stack (or stack) is a separate 16K byte memory in the DL40. It is used to record information about the triggering and display of messages.

Putting Messages on the Stack

- Requires the Message Attribute to be set using the Onboard Editor or Offline Programming Software for each message you wish to go on the stack.
- Messages will be put on the stack with variables and ASCII Input included.
- Variables in a message are put on the stack as soon as they are received by the DL40. An additional stack entry for a message will be made if:

Allen-Bradley Parts

  - an updated variable is received for a variable already on the stack and more than 2 seconds elapse between receiving the original variable and the updated variable.
  - If less than 2 seconds elapse, the original variable put on the stack will be overwritten by the updated variable.

- Messages can be accompanied by time & date stamping.
- Messages are put on the Historical Events Stack each time they are triggered.

Note: Bit Trigger Run Mode Only – The Bit Trigger Table is put on the Stack as soon as it is received by the DL40. Each time a message with the stack attribute set is displayed or redisplayed, an entry for that message is put on the stack.

Time and Date Stamping of Messages Put on the Stack

- Requires the Message Attribute to be set using the Onboard Editor or Offline Programming Software for each message you wish to stamp.
- The DL40's real time clock value is added to message data on the stack when:
  - a message is run
  - a message is triggered (if it is never run)
  - a message is triggered and if the time between triggering and running is more than 1 minute
  - if an additional stack entry is made because variable data is updated (see above)
  - a message is acknowledged

Resetting the Stack

Each time a new application file is downloaded using a Memory Module – Read from Module, a Tape Functions – Read from Tape, or an Offline Programming Software Download to DL40 *or* Read from Tape, the stack is reset. **All previous stack data is lost.**

Triggering Special Message number 909 also resets the stack with a loss of all previous stack data.

Historical Recall

The Historical Recall Mode is entered from the Run Mode by either a [CTRL] [S] via the DL40 Keyboard Port or by using [SELECT] and [ENTER] push buttons on the front panel of the DL40.

Pressing the [ESC] or [MSG ACK] key immediately returns you from any point in the Historical Events Mode to the previous menu level.

Note: If you enter the Historical Recall Mode via the DL40 Keyboard Port, you *must* continue to use the DL40 Keyboard Port. If you enter the Historical Recall Mode via the front panel bush buttons, you must continue to use the front panel push buttons.

View the Stack

You can view the Historical Events Stack in either **chronological order** or **relative frequency of occurrences**.

Chronological Order

When the Historical Events Stack is viewed in chronological order **in Message/Variable/Slave, Message/Variable, and Message List Run Modes**, the newest information placed on stack will be displayed first; the oldest will be displayed last. To view the next screen of stack data, press any key on the keyboard or [SELECT] or [ENTER] push buttons on the front panel.

Note: If you entered this mode via the DL40 Keyboard Port, you *must* continue to use the DL40 Keyboard Port; if you entered via the front panel push buttons, you must continue to use the front panel push buttons.

Events are displayed in the following format:

- Message Number
- Message Text (including variables, time, date)
- TRIGGERED (if time stamped and if time between triggering and display more than 1 minute) *hour:minute:second month date year **
- Status

  RAN
  *hour:minute:second month date year**
  SENT TO SLAVE: XXX
  *hour:minute:second month date year**
  NOT RUN
  ADDED
  *hour:minute:second month date year**
  DELETED
  *hour:minute:second month date year**
  ATTEMPTED TO ADD (Add fail)
  *hour:minute:second month date year**
  DEL(ETE) FAIL – NOT IN LIST
  *hour:minute:second month date year**

- MSG ACKNOWLEDGED (if applicable)
  *hour:minute:second month date year **

* If *Time* attribute is set.

Allen-Bradley Parts

If a variable is called for but no variable is available, the message will be put on the Historical Events Stack with symbols replacing variables:

*	for [CTRL][V] variables
@	for [CTRL][W] variables
^	for ASCII Input Data using [CTRL][X]

Press any key on the keyboard or the [SELECT] or [ENTER] push button on the front panel to scroll through the stack entry for a message. After you have scrolled through the entry, pressing any key on the keyboard or the [SELECT] or [ENTER] push button on the front panel will bring up the next entry.

Pressing [ESC] or [MSG ACK] returns you to the CHRONOLOGICAL prompt.

After the last event is displayed, the DL40 will display:

END OF H.E. STACK
PRESS ANY KEY.

When the Historical Events Stack is viewed in chronological order in **Bit Trigger mode**, the Bit Trigger Tables on the Historical Events Stack will be displayed in chronological order. The newest information placed on the stack will be displayed first; the oldest will be displayed last. A new Bit Trigger Table will be put on the stack only when the state of one or more bits in either the *Priority Section* or the *Round Robin Section* is changed. To view the next stack entry, press any key on the keyboard or the [SELECT] or [ENTER] push button on the front panel.

Note: If you entered this mode via the DL40 Keyboard Port, you must continue to use the DL40 Keyboard Port; if you entered via the front panel push buttons, you must continue to use the front panel push buttons.

All messages (with stack attribute set) in the Bit Trigger Table that were actually displayed will be shown first. They will be in the same format as messages for other Run Modes. Following these messages will be the Bit Trigger Table.

Stack data for the Bit Trigger Run Mode is displayed in the following format (data put on stack last will be displayed first):

– List of Round Robin messages that were run

MESSAGE #
Message Text
RAN
hour:minute:second month date year*

– List of Priority Section messages that were run

MESSAGE #
Message Text

RAN
hour:minute:second month date year*

– *NEW IMAGE FILE* (Bit Trigger Table)
hour:minute:second month date year (always time stamped)

– PRIORITY SECTION
a list of message numbers with bits set in the Priority Section or *NO MESSAGES* will be displayed.

– ROUND ROBIN SECTION
a list of message numbers with bits set in the Round Robin Section or *NO MESSAGES* will be displayed.

* If *Time* attribute is set.

Note: Priority Message entries will be found among the Round Robin messages or the Priority Section messages depending on which section was running when the Priority Message was triggered.

Number of Occurrences

Information on the Historical Events Stack will be displayed by frequency of occurrence. The message that is *stacked* (see note below) the most will be displayed first; the least will be displayed last. To view the next event on the stack, you press any key on the keyboard or the [SELECT] or [ENTER] push button on the front panel.

Note: A message can be triggered once but *stacked* several times if variables are updated.

Note: If you entered this mode via the DL40 Keyboard Port, you must continue to use the DL40 Keyboard Port; if you entered via the front panel push buttons, you must continue to use the front panel push buttons.

Events are displayed (one message per screen) in the following format:

MSG#: **NNNN XXX**

Where:

NNNN	=	Message Number (1–9999)
XXX	=	Number of times message was triggered (after 999 the count will recycle to 1)

Press any key on the keyboard or the [SELECT] or [ENTER] push button on the front panel to bring up the next message.

Pressing [ESC] or [MSG ACK] returns you to the # *OF OCCURRENCES* prompt.

After the last event is displayed, the DL40 will display:

END OF H.E. STACK
PRESS ANY KEY

Allen-Bradley Parts

Print Stack

You can print the Historical Events Stack in either *Chronological order* or by the *number of occurrences*.

From the DL40 Keyboard Port, enter [Y] (yes) or [N] (no) followed by [↵] for each prompt. From the front panel, enter [SELECT] or [ENTER] for each prompt. [SELECT] corresponds to [N]; [ENTER] corresponds to [Y]. If you enter [N] to # of Occurrences, the DL40 goes back to the Print the Stack prompt. Pressing [ESC] or [MSG ACK] immediately returns you to the last prompt. If the DL40 is performing the Print function, that function will be aborted.

When one of the choices is selected, the DL40 will display:

PRINTING H.E. STACK

As long as the Historical Events Stack is being printed, PRINTING H.E. STACK will be displayed.

Events are printed in the same format as View the Stack.

After the last event is printed, the DL40 will return to the CHRONOLOGICAL OR # OF OCCURRENCES prompt.

Remote Program Mode

You can create and edit application files offline using the Dataliner DL40 Series Offline Programming Software (Catalog Number 2706-ND1). You can use its interactive menus on a personal computer to create messages, set message attributes, and download to one or more DL40 message displays.

For more information on using the Offline Programming Software, refer to the *Dataliner DL40 Series Message Display Offline Programming Software User Manual* (Publication 2706-808).

Backup Mode

This mode will let you *write* (down load) the DL40's internal application memory to an external tape or to an External Memory Module. You can also *read* (upload) data into the DL40's internal application memory from an external tape or the External Memory Module.

Entering Backup Mode from the DL40 Keyboard Port

This mode is entered if the DL40 is in the Run Mode by a [CTRL] [B] via the DL40 Keyboard Port.

When you enter the Backup Mode from the DL40 Keyboard Port, you will receive the following prompts (one at a time):

WRITE TO MODULE
READ FROM MODULE
WRITE TO TAPE
READ FROM TAPE
RETURN TO RUN MODE

Enter [Y] (Yes) or [N] (No) followed by [↵] for each prompt. If you enter [N] to Return to Run Mode, the DL40 goes back to the first prompt. Pressing the [ESC] key immediately takes you from the Write to or Read from prompt to the Run Mode. Pressing the [ESC] key while Writing or Reading will return you to the Write / Read prompt. If the DL40 is performing a backup function, that function will be aborted.

Important: During this Read from Module or Read from Tape procedure you will receive the prompt:

INTERNAL MEMORY WILL BE ERASED – – OK?

If you enter [Y] [↵] the internal application of the DL40 will be erased even if you decide to abort the read by pressing the [ESC] key.

Entering Backup Mode from the Front Panel Push Buttons

Use the front panel push buttons to select the read or write function required.

Before reading or writing to or from tape or Memory Module, make certain that the DL40 is connected to a tape recorder via the RS–232 port or that a Memory Module is plugged into the right side of the DL40.

ATTENTION: Never connect or disconnect tape recorder or Memory Module with power applied.
Do not leave the Memory Module permanently attached to the DL40. Remove the module (with power off immediately after performing the Read from or Write to procedure.

Write to Module

When the Write to Module prompt is displayed, enter [Y] [↵] from the DL40 Keyboard Port or [↵] from the front panel. DL40 will display:

EXTERNAL MODULE WILL BE ERASED – – OK?

Important: If you enter [Y] [↵] or [↵] the contents of the Memory Module will be erased even if you decide to abort the write by pressing the [ESC] key or [MSG ACK] push button.

Press [Y] [↵] from the keyboard or [↵] from the front panel and downloading to the module will begin. After downloading is finished, the DL40 will display:

Allen-Bradley Parts

WRITE COMPLETE
PRESS ANY KEY

Pressing any key or front panel push button will return the DL40 to the WRITE TO MODULE prompt.

If you stop the write (pressing [ESC] or [MSG ACK]), the DL40 will display:

USER ABORTED WRITE
PRESS ANY KEY

Pressing any key or front panel push button will return the DL40 to the WRITE TO MODULE prompt.

Error Messages

NO MODULE INSTALLED
PRESS ANY KEY

If the Memory Module is not properly installed.

MODULE TOO SMALL

If module memory is not large enough to hold the entire application memory.

ERROR WRITING MODULE

If the Memory Module is bad.

Read from Module

When the READ FROM MODULE prompt is displayed, enter [Y] [↵] from the DL40 Keyboard Port or [↵] from the front panel. DL40 will display:

INTERNAL MEMORY WILL BE ERASED – – OK?

Important: If you enter [Y] [↵] or [↵] the contents of the DL40's internal application memory will be erased even if you decide to abort the read by pressing the [ESC] key or [MSG ACK] push button.

Press [Y] [↵] from the keyboard or [↵] from the front panel and uploading the application stored on the Memory Module will begin. After uploading is finished, the DL40 will display:

READ COMPLETE
PRESS ANY KEY

Pressing any key or front panel push button will return the DL40 to the READ FROM MODULE prompt.

If you stop the read (pressing [ESC] or [MSG ACK]), the DL40 will display:

USER ABORTED READ

Pressing any key or front panel push button will return you to the READ FROM MODULE prompt.

Error Messages

NO MODULE INSTALLED
PRESS ANY KEY

If the Memory Module is not properly installed.

MEMORY TOO SMALL

If DL40 internal application memory size is not large enough to hold the entire application stored on the Memory Module.

ERROR WRITING MEMORY

If the DL40's internal memory circuitry is bad.

Write to Tape

Allows the contents of the DL40's internal application memory to be written (downloaded) to an Allen–Bradley 1770-SA or 1770-SB tape recorder.

When the WRITE TO TAPE prompt is displayed, press [Y] [↵] from the keyboard or [↵] from the front panel. The DL40 will display:

START TAPE, BAUD = __ __ __ __
PRESS ANY KEY

Note: The baud rate of the DL40 and the tape recorder must match.

Press any key from the keyboard or any push button from the front panel and downloading to the tape recorder will begin.

The DL40 will display:

SENDING XXXX OF YYYY

Where:

XXXX	=	Message being downloaded (first, second, third, etc.)
YYYY	=	Total number of messages in the file

When the entire file is downloaded, the DL40 will display:

WRITE COMPLETE
XXXX GOOD YYYY FAIL

Showing successful and unsuccessful message writes.

If you stop the write (pressing [ESC] or [MSG ACK]), the DL40 will display:

Allen-Bradley Parts

USER ABORTED WRITE
XXXX GOOD YYYY FAIL

Pressing the [ESC] key or [MSG ACK] push button will return the DL40 to the WRITE TO TAPE prompt.

Error Messages

TAPE TIMEOUT

If the DL40 is unable to complete the write function.

Note: If tape unit ERROR light is on or tape is not moving during the write operation, data was not properly loaded onto tape. Check RS-232 cabling from RS-232 port to tape recorder.

Read from Tape

Reads a tape (uploads) from an Allen–Bradley 1770–SA or 1770–SB tape recorder into the DL40's internal application memory.

When the READ FROM TAPE prompt is displayed, press [Y] [↵] from the keyboard or [↵] from the front panel.

The DL40 will display:

INTERNAL MEMORY WILL BE ERASED – – OK?

If you press [Y] [↵] or [↵] the internal application of the DL40 will be erased even if you decide to abort the read by pressing the [ESC] key or [MSG ACK] push button.

Press [Y] [↵] or [↵] DL40 will display:

WORKING...

while the internal application memory is being cleared. Then the DL40 will display:

START TAPE, BAUD= _ _ _ _

Note: The baud rate of the DL40 and the tape recorder must match.

Start the tape and the DL40 will display:

READING XXXX OF YYYY

Where

XXXX	=	Message being uploaded (first, second, third, etc.)
YYYY	=	Total number of messages in the file

When the entire file is uploaded, the DL40 will display the following summary showing successful and unsuccessful message transfers:

READ COMPLETE
XXXX GOOD YYYY FAIL

If you stop the read (by pressing [ESC] or [MSG ACK]), the DL40 will display:

USER ABORTED READ
XXXX GOOD YYYY FAIL

Pressing the [ESC] key or [MSG ACK] push button will return the DL40 to the READ FROM prompt.

Error Messages

NO INPUT FROM TAPE

If no data of any kind has been received from the tape port.

TAPE TIMEOUT

If some data is received but input stopped before complete file was read.

INVALID TAPE HEADER

If the application file on the tape is incompatible with the DL40 and cannot be uploaded or if baud rates are different.

BAD SYS ATTRIBUTES

If the attributes chosen under SETUP in the Offline Programming Software are incompatible with the DL40.

ERROR WRITING MEMORY

If the DL40's internal memory circuitry is bad.

Set Port Parameters Mode

This mode lets you set the operating parameters of the RS-232 Port or RS-485 Port from a keyboard or the front panel. See Chapter 8 for uses of these ports.

Note: You can also use the Offline Programming Software to set port parameters.

Use a [CTRL][R] from the keyboard or the [SELECT] and [↵] push buttons on the front panel to enter this mode.

Select either SET RS–232 PORT or SET RS–485 PORT.

RS–232 Port

After you select the the RS-232 port you will be able to select either PGMR / PRNTR SETUP or TAPE PORT SETTINGS.

Allen-Bradley Parts

Note: Tape port settings are valid only when Writing to Tape or Reading from Tape.

PGMR / PRNTR SETUP

The following settings are available when you select PGMR / PRNTR SETUP. Use the keyboard spacebar or [SELECT] to cycle through the choices. The default value appears in **bold**.

Parameter	Available choices
Baud Rate	300, 1200, 2400, 4800, **9600**, 19200
Data Bits	7 or **8**
Parity	**None**, Odd, Even
Handshaking	**None**, Soft(ware), Hard(ware)

Below are the settings of the RS-232 Port when the Print Stack or Print Mode function is active. The following settings are acceptable for these parameters. Note that entries out of range will not be accepted by the DL40. Press [ENTER] to accept a parameter setting.

Parameter	Available choices
Null Count	0 to 255
Width	20 to 132

RS-232 Tape Recorder Settings

Note that RS-232 Tape Recorder Settings are valid only when writing to or reading from a tape drive, and that communications to a tape recorder can be made *only* via the RS-232 port.

Baud rate is the only modifiable parameter applicable while using a tape recorder. Your choices are listed below. The default value appears in **bold**. Use the keyboard spacebar or [SELECT] to cycle through baud rate choices.

Parameter	Available choices
Baud Rate	300, 1200, 2400, 4800, **9600**

This setting will revert to normal RS-232 Port settings (described above) when the Tape function is finished.

RS-485 Port

The following settings are available for the RS-485 Port. The default value appears in **bold**. Use the keyboard spacebar or [SELECT] to cycle through baud rate choices. Press [ESC] or [MSG ACK] to quit without saving any changes to communications parameters.

Parameter	Available choices
Baud Rate	300, 1200, 2400, 4800, **9600**, 19200
Data Bits	7 or **8**①
Parity	**None**, Odd, Even②
Port Use	DL40 Programmer, **DL Slaves**, Devices Using Open Protocol

① This setting should **always** be 8 if Port Use is set to Programmer.

② This setting should **always** be None if Port Use is set to Programmer.

Important: Do not set Port Usage to DL Slaves or Devices Using Open Protocol if downloading message files to the DL40 via the RS-485 Port.

Triggering Port Settings

The parameters presented here will differ between Remote I/O and Parallel Port versions of the DL40 Message Display. The following settings are available only on **Remote I/O units**. The default value appears in **bold**.

Parameter	Available choices
Message Format	**Binary**, BCD
Variable Format	**Binary**, BCD
Control-W Format	BCD, **ASCII**
Bit Trigger Priority Section Size	**0** to 31 words
Always Send Clock Data	Yes or **No**①

① If selection is Yes, only clock data will be returned to a PLC *no matter what attributes are set or what data is requested.*

The following settings are available only on **Parallel Port units**. The default value appears in **bold**.

Allen-Bradley Parts

Parameter	Available choices
Message Format	**Binary**, BCD
Variable Format	**Binary**, BCD
Control-W Format	BCD, **ASCII**
High True Logic	**Yes** or No
Using AC/DC Converter	Yes or **No**
Data Hold Time	**40** to 255 msec① or 10 to 255 msec②

① If using AC/DC Converter

② If *not* using AC/DC Converter

Clock Mode

This mode lets you set the DL40's real time clock by entering a [CTRL] [C] via the DL40 Keyboard Port or by the using the [SELECT] and [↵] front panel push buttons. This mode can only be entered if the DL40 is in the Run Mode.

When you enter the Clock Mode from a keyboard, you will receive the following prompts (one at a time):

SET CLOCK

SHOW CLOCK

RETURN TO RUN MODE

Enter [Y] (yes) or [N] (no) followed by [↵] for each prompt. If you enter [N] to return to Run Mode, the DL40 goes back to the first prompt. Pressing [ESC] or [MSG ACK] immediately returns you from the Clock Mode prompts to the Run Mode. Pressing [ESC] or [MSG ACK] while *Setting* or *Showing* the clock immediately returns you to the Clock Mode prompts. If the DL40 is performing a clock function, that function will be aborted.

Via the Front Panel Push Buttons

You will receive the same prompts as above. Use the [SELECT] push button to increment or toggle through settings. Press [↵] when the correct data is displayed.

After SECONDS are entered, the new clock data will be saved and the DL40 will display the SET CLOCK prompt.

If Set Clock is aborted by using a [MSG ACK], real time clock data will remain unchanged.

Note: The clock can also be set (while the DL40 remains in the Run Mode) by triggering Special Message 910 or 911. See pages 5 – 4 and 5 – 5 for more information.

Via the DL40 Keyboard Port

When you enter the Set Clock function, you will receive the following prompts (one at a time):

Parameter	Available choices
MONTH	Jan to Dec – Use the spacebar to cycle through the months, then press [↵] when the correct entry is shown.
DAY	1 to 31 followed by [↵]
YEAR	0 to 99 followed by [↵]
TIME FORMAT	Use the spacebar to toggle between time formats. Press [↵] when the correct entry is shown. Select [AM/PM] or [24 hr]
HOUR	1 to 12 or 1 to 23 followed by [↵]
IS THIS AM	Only for 12-hour clocks. Enter [Y] or [N] followed by [↵]
MINUTES	0 to 59 followed by [↵]
SECONDS	0 to 59 followed by [↵]

After SECONDS are entered, the new clock data will be saved and the DL40 will display the SET CLOCK prompt.

If Set Clock is aborted (by pressing [ESC]), real time clock data will remain unchanged.

Show Clock

Note: Show Clock is only available when the menus are entered via the keyboard[CTRL][C]; it is not available via the front panel push button menus.

This displays real time clock values in the following format:

HH:MM:SSA
DAY MON YR

HH = hour MM = minute SS = second
A (AM) or P(PM) not displayed if 24 hour format is used.

Allen-Bradley Parts

Print Mode

The Print Mode lets you print the list of Message Numbers and text in the DL40's internal application memory and/or the current settings for all parameters. This mode can only be entered from the Run Mode by entering either a [CTRL] [P] via the DL40 Keyboard Port or by using the [SELECT] and [↵] push buttons on the front panel of the DL40.

If you enter the Print Mode via a keyboard, you can select to print messages and/or parameters. If you enter the Print Mode via the front panel, you can only print both messages and parameters.

From the keyboard, enter [Y] (yes) or [N] (no) followed by [↵] for each prompt. From the front panel, enter [SELECT] or [↵] for each prompt. Select corresponds to No; Enter corresponds to Yes. If you enter [N] to *Return to Run Mode*, the DL40 goes back to the first prompt. Pressing [ESC] or [MSG ACK] returns you from the Print Mode prompts to the Run Mode. Pressing [ESC] or [MSG ACK] while *printing* returns you to the Print Mode prompts. If the DL40 is performing a print function, that function will be aborted.

Debug Mode

This mode will only exist on the Parallel Port Version of the DL40. It allows you to monitor the current state of all of the parallel port inputs.

There are three ways that you can enter this mode. The first way is for the unit to be powered up with the Debug/Run Mode DIP switch in the Debug position. The second way is to enter a [CTRL] [D] via the DL40 Keyboard Port when the unit is in the Run Mode. The third way is to use the [↵] and [SELECT] push buttons on the front panel of the DL40.

If this mode was entered via the Debug/Run Mode DIP switch on power–up, the DL40 will remain in this mode until the dip switch is changed to Run Mode position and unit is reset.

If this mode is entered via the [CTRL] [D] or front panel push buttons while in the Run Mode, the display will remain in this mode until the user presses any key on the keyboard or [↵] or [SELECT] push button.

The display will have the following format in this mode:

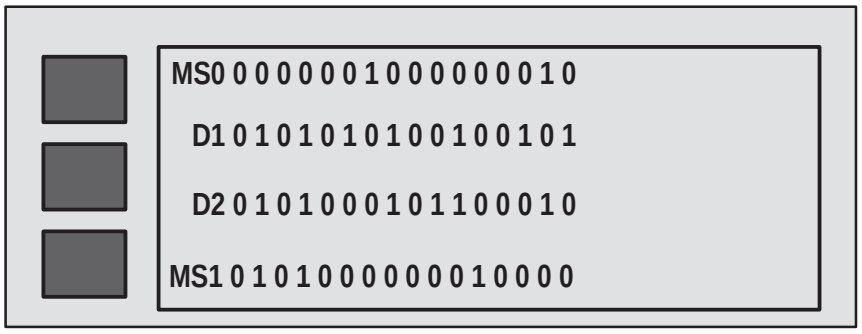

Where the Strobe Lines Mnemonic is an abbreviation for the state of the four strobe lines MS0, MS1, MS2, MS3. The interpretation of these lines is dependent on the Run Mode selected by the user with the Offline Programmer Software.

The Data Lines State will be a pattern of sixteen 1s and 0s indicating the voltage state of the data inputs D0–D15.

Voltage Range	High True Logic	Low True Logic
0 – 0.8 VDC	0 (OFF)	1 (ON)
0.8 – 3.5 VDC	Indeterminate	Indeterminate
3.5 – 25 VDC	1 (ON)	0 (OFF)

You select the type of logic to use when programming the DL40 with the Offline Programmer Software.

The Strobe Lines Mnemonic will occupy the first three positions of the display (starting from the left). This will be followed by a space character and then the state of D15, D14, D13 and so on until the state of D0 which will be in the far right position of the display. The following table shows the mnemonics that will be displayed for the strobe lines for different Run Modes.

High True or Low True Logic

Run Mode	MS3	MS2	MSl	MS0	Mnemonic
Msg/Var/Slave	0	0	0	0	NUL
	0	0	0	1	MSG
	0	0	1	0	SLV
	0	0	1	1	SGN
	1	0	0	0	D1 (Variable 1)
	1	0	0	1	D2 (Variable 2)
	1	0	1	0	D3 (Variable 3)
	1	0	1	1	D4 (Variable 4)
	1	1	0	0	D5 (Variable 5)
	1	1	0	1	D6 (Variable 6)
	1	1	1	0	D7 (Variable 7)
	1	1	1	1	D8 (Variable 8)
	0	1	1	0	D9 (Variable 9)
	0	1	1	1	D10(Variable 10)
	0	1	0	0	NV(Not Valid)
	0	1	0	1	INV(Invalid)
Message List①	X	X	0	0	NUL
	X	X	0	1	PRI
	X	X	1	0	ADD
	X	X	1	1	DEL

① x = Ignored

Allen-Bradley Parts

Chapter 7

Messages

This chapter describes the use of the DL40 message display's front panel push buttons or its Onboard Editor and an optional keyboard to manage message files, messages, and the attributes that control their display.

Overview

The functions listed in this chapter can be controlled by one or both of the following methods:

- Onboard Editor with optional keyboard
- Front Panel Push Buttons

Entering the Onboard Editor

The Onboard Editor can only be entered from the Run or Help Mode. Press [CTRL] [E] to enter the Onboard Editor.

Use the Menu Tree shown on the following page as a guide to onboard editing. Answer [Y][ENTER] to enter into a function; [N][ENTER] to go to the next function. After you have gone through all the functions on a level, entering [N][ENTER] will return you to the first function on that level.

Note: Pressing [ESC] returns you to the previous menu level. You can exit the Onboard Editor at any time by pressing [ESC] one, two, three, or four times depending on which level of the editor you are at.

Exiting the Onboard Editor

You can exit from the Onboard Editor in either of two ways:

- To exit and save your work, press [F10] to save your work, then press [ESC] three times to return to Run Mode.
- To exit without saving any changes you have made, press [ESC], answer [Y][↵] to the confirmation request, then press [ESC] three more times. You will not be asked to confirm your decision if you have made no changes to the message.

Onboard Editor Menu Tree

Refer to the following diagram for an overview of the Onboard Editor's basic architecture.

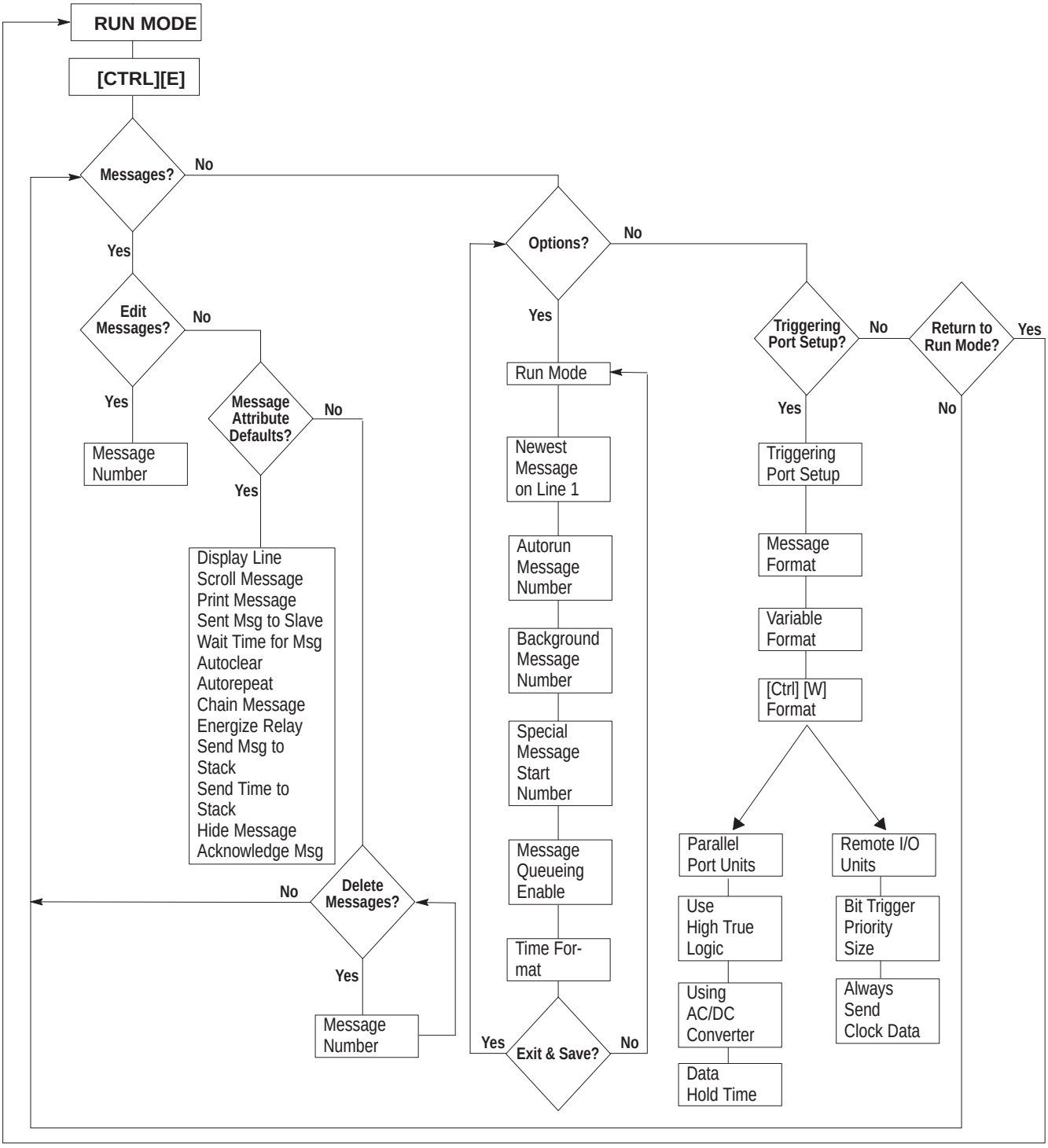

Allen-Bradley Parts

Creating or Editing Messages

Enter the MESSAGES function ([Y][↵]). Enter the EDIT MESSAGES function ([Y][↵]). Respond to the EDIT MSG prompt with a new message number to create a message or an existing message number to edit a message.

Note: FILE FREE gives you the number of kilobytes remaining in the Internal Application Memory.

If there is no memory space left the DL40 will display:

MEMORY FULL
PRESS ANY KEY

If your message exceeds 200 characters (including spaces) the DL40 will display:

MAXIMUM LENGTH MSG
PRESS ANY KEY

Message Text

Your messages can consist of the following:

- ASCII text (including *extended* ASCII characters if you are using the Offline Programming Software)
- Variable data

Create and edit messages using the rules presented in Table 7.A.

Table 7.A
Keys for navigating and editing your message text

Any alphabetic or numeric key	Inserts that character at the position of the cursor.
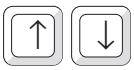	Moves the cursor up or down one line at a time
	Moves the cursor right or left without changing the underlying text
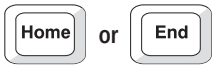	Moves cursor directly to the beginning or end of the message
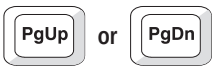	Moves cursor exactly 1 display window forward or backward through the message (except when Scroll attribute is set)
	Toggles between Insert and Overstrike. In the Insert mode, the DL40 displays a large blinking cursor. In the Overstrike mode, the DL40 displays a small blinking cursor. Whenever you enter the Onboard Editor, you are in *Insert* mode. If there is a character at the position of the cursor, the *Insert mode* inserts a character immediately to the left of the cursor; *Overstrik*e mode replaces the character at the cursor position with a new character.
	Deletes the character to the left of the cursor
	Deletes the character at the cursor position

↵	Inserts a return to start a new line
CTRL + A	Lets you set Message Attributes for *only* the message being created or edited. **Note:** The new message attributes will not be used if you press [ESC] or a timeout occurs while in the [CTRL][A] prompt sequence
CTRL + B	Start and end marker for blinking characters. Must be used in pairs. The text between the markers will blink on the message display.
CTRL + E	Erases message text, but leaves message number intact. You will be asked to confirm this action before it takes effect.
ESC	Returns to Messages menu. Note that the Abort Message Edit confirmation pop-up will appear if you have changed the message in any way. The pop-up will ask if you want to discard your changes.
F1	Displays and scrolls through a list of editor commands
F10	Saves message as edited

Variables

You can send variables to the DL40 from a PLC via the Remote I/O, RS-485, or Parallel Input Port. Variables can be sent to message *only* in the Message/Variable/Slave or Message/Variable Run Modes. You can insert variables by using the [CTRL] key in combination with a letter. Commands to add or modify variables include:

Command	Function
[CTRL][V]	Insert a BCD or binary variable
[CTRL][F]	Change the formatting parameters of a variable
[CTRL]W]	Insert ASCII or BCD variable data
[CTRL][X]	Insert request for ASCII input data
[CTRL][T]	Insert the system time into a message
[CTRL][Y]	Insert the system date into a message

The number of variables you can insert in any one message depends upon your hardware and the Run Mode you have chosen.

Insert Formatted Variable With [CTRL][V]

Use [CTRL][V] to insert a BCD or binary variable into a message. Specify the variable type.

When you press [CTRL][V], the software will ask you to enter 3 parameters:

Allen-Bradley Parts

Parameter	Acceptable values
Variable Size	**1 to 7** (including decimal point)
Decimal Point Position (number of places after the decimal point)	**0 to 6** (the maximum value is one less than the variable size selected above)
Suppress Zeroes (appearing in front of the first significant digit)	**Y(es) or N(o)**

The variable symbol _ _ _•_ _ will appear in your message at the variable's location.

The difference between a formatted variable entered with [CTRL][V] and an unformatted variable entered with [CTRL][W] lies in the flexibility provided by the ability to modify the parameters shown above.

Note that neither AutoRun Messages or Background Messages support inserted variable data.

Change Formatted Variable With [CTRL][F]

Use [CTRL][F] to change the formatting parameters of a variable. To do so, place the cursor under the symbol for the variable you want to change, then press [CTRL][F]. The software will ask you to modify any one or more of the 3 formatting parameters described above:

Parameter	Acceptable values
Variable Size	**1 to 7** (including decimal point)
Decimal Point Position (number of places after the decimal point)	**0 to 6** (the maximum value is one less than the variable size selected above)
Suppress Zeroes (appearing in front of the first significant digit)	**Y(es) or N(o)**

Insert ASCII or BCD Variable With [CTRL][W]

You can send a single word ASCII or BCD variable for insertion into a message. Use [CTRL][W] to specify the insertion position. The software will prompt you to specify either ASCII or BCD. The software will insert the symbol for an ASCII or BCD variable (↕).

Note: BCD data consists of 4 digits per word, and ASCII data consists of 2 characters per word.

Note: Variables can be strung together to form compound variables up to 20 ASCII or 40 BCD characters long in any combination as long as the *total* does not exceed 10 words.

Insert Request for ASCII Input Data With [CTRL][X]

A data request requires that ASCII Input Data (an 8-bit ASCII character) be entered through the keyboard port into the message being displayed.

- When returning ASCII Input Data via RS-485 Port, the message requesting the data must be triggered via the RS-485 Port. This is true for both Parallel Port and Remote I/O units. Data is automatically entered when you press [↵].

  Note: Data is returned to the triggering device without solicitation by the device and without an checking that data was received by the device.

- With Remote I/O units, the ASCII input data will be sent via Remote I/O Port to your PLC as part of the Return Message Number Being Displayed. Data can be returned to your PLC in:
  - Message/Variable/Slave Run Mode
  - Message/Variable Run Mode
  - Message List Run Mode

  User requested data is sent to the PLC as part of the I/O scan. Up to 20 ASCII characters can be sent with Block Transfer. Up to 12 ASCII characters can be sent with Discrete, depending on rack size.

  The Enter bit will be set only after *all* ASCII data requested has been put into the message. Data should *not* be considered valid until the Enter bit is set.

  Important: If more ASCII data is requested than can be returned to the PLC, the excess data will be lost.

To enter a data request, place the cursor just after the point where you want to insert the request. Use [CTRL][X] to specify the insertion position. The software will insert the symbol for a single byte data request (↑).

Insert Time Into a Message With [CTRL][T]

To enter the time into a message, place the cursor just after the point where you want the time inserted. Use [CTRL][T] to specify the insertion position. The software will insert the symbol for a time variable (HH:MM:SS).

Note: The time variable occupies 8 of the available 20 characters on a display line.

You can use the time variable in any Run Mode.

Insert Date Into a Message With [CTRL][Y]

To enter the date into a message, place the cursor just after the point where you want the date to appear, and then press [CTRL][Y]. The software will insert the date symbol (DAY MON YR).

Note: The date variable occupies 10 of the available 20 characters on a display line.

Allen-Bradley Parts

You can use *one* date variable in any message in any Run Mode.

Note

We recommend setting individual message attributes such as Display Line and Scroll Message *before* typing in the words of the message. This allows you to verify the placement of characters as you type them.

Testing Messages

Pressing [CTRL][R] while editing a message runs the message you are editing just as it would be displayed in the Run Mode except:

- Message will not be put on Historical Events Stack
- Time and Date are not put on Historical Events Stack
- Special Messages cannot be run
- [CTRL][V] and [CTRL][W] variable data will not be displayed in a message. They are represented by asterisks (****)
- [CTRL][X] Data Requests will be represented by underscores (_ _ _ _). Values for Data Requests can be put into a message for testing using a keyboard
- Data cannot be returned via Remote I/O or RS-485 port

Message Attribute Defaults

The Message Attribute Defaults apply universally to all messages when they are created. (You can modify the message attributes for an *individual* message by using [CTRL][A] while editing that message.) The modifiable message attributes you can control from the Online Editor appear below, along with a brief description of their use.

- Display message on what line
- Scroll message
- Print message
- Send message to Slave number
- Wait Time for message
- Clear message automatically
- AutoReplace
- Chain message to another
- Energize relay
- Send message to the stack
- Send message time to the stack
- Hide message on display
- Acknowledge message

Note: The following Message Attributes are new in Version 3.00 or later firmware and can be accessed only through the Offline Programming Software (Catalog No. 2706-ND1, Series D, Ver. 3.00 or later):

- Slave Color
- Slave Relay
- Slave Length

Display Line

This value controls where on the DL40 display the message will appear. Options are different for 2 and 4 line versions. Use the spacebar to move through the available choices, then press [↵] when you see the correct value.

With 2 line units, choose from	With 4 line units, choose from
All Lines	All Lines
Line 1 Only	Line 1 Only
Line 2 Only	Line 2 Only
	Line 3 Only
	Line 4 Only

Scroll Message

This message attribute determines whether the message will scroll across the DL40 Message Display. You can activate scrolling only if the Line Usage attribute (described above) has been set to use a single line. Type [Y][↵] to activate or [N][↵] to deactivate.

Print Message

If the Print message attribute is set to Y, then the DL40 Message Display will send any triggered message to a printer via the DL40 RS-232 Port. The message will be printed only once (even if the Auto repeat attribute is active) unless the message contains *changed* variable data. If new variable data is received while the message is running, then the message will be printed more than once. Type [Y][↵] to activate or [N][↵] to deactivate.

Send to Slave

If you enter a slave number here and a message is triggered via the Remote I/O or Parallel or Keyboard ports, the message will be sent to the slave with the specified address. This attribute is valid for all Run Modes. However, the slave address set when operating in the Message/Variable/Slave Run Mode overrides this attribute.

Allen-Bradley Parts

Important: To send *any* message to a slave, Port Use for the RS-485 port must be set to DL Slave. Refer to page 6 – 12 for information on Ports.

If the AutoReplace attribute is active, the message will be sent to the slave each time it repeats. If the message has embedded variables, it will be sent to the slave each time new variable values are received during the message wait time. Possible values for this field include:

Entry:	Which means:
0	Don't send to slave
1 through 126	Send to the single identified slave address
127	Send to all slaves

Wait Time

This setting can mean either of two things to the message display.

If you have activated Scroll message, the value here represents the scrolling rate in tenths of a second. For example, a value of 8 here will result in display of the next new character in a message every 0.8 seconds.

If Scroll message is *not* active, then the value here represents the number of seconds a message will appear on the message display. For example, a value of 5 here will assure that the message will appear on screen for 5 seconds whenever it runs.

Acceptable values for this field can range from 0 through 31.

AutoClear

Activating this attribute instructs the DL40 to clear the message from the display after the Wait Time for message has expired *even if no other messages have been triggered*.

This value applies only to the lines used by a single message. For example, if this message uses only lines 2 and 3, then only lines 2 and 3 will be cleared. Lines 1 and 4 will remain unchanged.

Important: AutoClear will de-energize the alarm relay *only* if the message which was cleared had energized the relay. A DL50 slave message display *must always* be sent a message that de-energizes the relay.

Type [Y][↵] to activate or [N][↵] to deactivate.

AutoRepeat

This attribute causes the display to repeat a message continually as long as no other message is in the queue waiting to run. This attribute only functions if the DL40 message display is operating in the Message/Variable/Slave or Message/Variable Run Mode.

This attribute is useful when you need to update variables repeatedly within a message.

Type [Y][↵] to activate or [N][↵] to deactivate.

Chain to Message

With this attribute you can link two messages together so that the second message will run automatically after the Wait Time has expired. The second message requires no additional triggering and no special modification of its attributes to respond. Also, the link is independent of the second message, which means that the second message can also run independently under other circumstances.

The second message will have its own attributes, which may be different from those of the first message. There is no limit to the number of messages that can be chained together, and messages can be chained to Special Messages.

Note: The Chain to Msg attribute will be disabled if AutoRepeat is active.

Activate this attribute by entering a valid message number.

Energize Relay

Activating this attribute will display the message *and* energize the DL40 message display's alarm relay whenever the message is triggered.

Important: The alarm relay will not de-energize even after the Wait Time has expired. The relay will de-energize when:

- a message is run for which the Energize relay attribute is *not* activated
- any Special Message runs
- the DL40 message display leaves the Run Mode

Important: AutoClear will de-energize the alarm relay only if the message which is cleared has the Energize relay enabled.

Allen-Bradley Parts

ATTENTION: Use the relay for annunciator purposes only. Do not use it for control.

Type [Y][↵] to activate or [N][↵] to deactivate.

Stack Message

When a message is triggered, enabling this attribute will put the message number on the Historical Events Stack. Variables will also be placed on the stack. Stacked messages can also be time stamped with the time the message was triggered and/or run.

Important Even if AutoRepeat is enabled, the message number (and time) will be put on the Historical Events Stack only once each time the message is triggered and/or run rather than each time it repeats. The message number, variables, and time (if applicable) will be put on the Historical Events Stack while the message is running or repeating only when updates to variables are received by the DL40

Type [Y][↵] to activate or [N][↵] to deactivate.

Stack Time

Enabling this attribute allows for time and date stamping of messages sent to the Historical Events Stack.

Type [Y][↵] to activate or [N][↵] to deactivate.

Hide message

When activated, the message will ***not*** appear on the DL40, but rather will be sent to a slave display, printer, tape recorder, or placed on the Historical Events Stack. The other attribute settings for the message determine its destination(s).

For example, assume Hide message is enabled, as are Print message and Send to slave 2. There will be no change on the DL40 display when the message runs, although a copy of the message will be printed and it will be displayed on the slave addressed as 2.

Note: When used with [CTRL][X] (ASCII Input Data), the underscore prompt for this data will still be displayed on the DL40 message display even when Hide message is active.

Type [Y][↵] to activate or [N][↵] to deactivate.

Acknowledge message

Enabling this attribute will instruct the DL40 message display to hold the message until you press the [MSG ACK] button on the front of the DL40 display. The next message will be displayed *only after* the [MSG ACK] button has been pushed.

Note: We recommend that you enable message queueing when using Acknowledge msg attribute.

Type [Y][↵] to activate or [N][↵] to deactivate.

Notes on Using Message Attributes

- If the defaults are changed, changes will apply only to messages created after that change.
- To change the Message Attributes of a single existing message, use the [CTRL][A] editing function.
- Some message attributes can be entered only via the Offline Programming Software. They include:
  - Slave Message Color
  - Slave Message Length
  - Echo Relay to Slave
- Characters from the Extended ASCII Character Set can only be entered via the Offline Programming Software. See Appendix A.
- Refer to the *Dataliner DL40 Series Offline Programming Software User Manual* (Publication 2706–808) for additional information.

Options

The Onboard Editor allows you to control a number of options from the keyboard.

With the Onboard Editor you can:

- select the Run Mode
- determine where and how new messages are displayed
- specify a message to AutoRun
- specify a background message
- set Special Message numbering to begin at 01 or 900
- enable or disable message queueing
- control the time display format

To modify Options:

1. enter the Onboard editor with [CTRL][X]

Allen-Bradley Parts

2. press [↵] in response to the query Messages?
3. press [Y] to the query Options?

The DL40 Onboard Editor will display each modifiable Option and give you a chance to accept the current value or enter a new one. Use the spacebar to move through the available settings, and press [↵] to accept your choice.

Each time you press [↵], you will move to the next Option. When you have worked through all the modifiable Options, you will be given a chance to save your settings and return to Run Mode, or cycle through the list again. Press [Y][↵] to exit and save or [N][↵] to return to the list of Options.

Run Mode

Select the Run Mode for the DL40. See elsewhere in this manual for complete explanations of all Run Modes.

For Remote I/O versions choose from:

- Message/ Variable
- Message/ Variable/Slave
- Message List
- Bit Trigger List

For Parallel Port versions choose from:

- Message/Variable/ Slave
- Message List

Newest Message on Line 1

In this mode, you will display the newest message to be triggered on line 1 and shift previously triggered messages down. The message on the bottom line will be shifted off the display. This supersedes the message attribute *Message on Line # Only* (messages are still displayed in 20 character pieces*).* Compatible with all Run Modes.

Type [Y][↵] to activate or [N][↵] to deactivate.

Autorun Message Number

An AutoRun Message is a message that will be displayed when your DL40 is powered up. It can be any message including a message in the Message List. The AutoRun Message does not support inserted variable data.

Specify a Message Number (a value of 0 deactivates AutoRun Message).

Note: Remote I/O units only – If communications between a DL40 and a PLC are not established at power-up, AutoRun Message will run only if switch 8 on Switch Bank #2 (Last State) is ON.

Background Message Number

The Background Message runs for a minimum of 2 seconds after the last message triggered has finished its display wait time. This message will be displayed until a valid message is triggered or until the Run Mode is exited. The Background Message does not support inserted variable data.

Specify a Message Number (a value of 0 deactivates Background Message).

Note: Remote I/O units only – If communications between DL40 and PLC are inactive or faulted, Background Message will run only if switch 8 on Switch Bank #2 (Last State) is ON.

Special Message Start Number

Special messages give you the ability to monitor and control certain functions of the DL40. These messages can occupy message numbers 1 thru 16, 901 thru 916, or be completely disabled.

Choose: **No Special Messages**
Special Messages at l
Special Messages at 901

Choice:	Which means:
None	Deactivate Special Messages
1	Special Messages start with 1
901	Special Messages start with 901

Message Queueing Enabled

Lets you put up to 20 messages in the Queue. These messages will be displayed in the order they were received as soon as the previous message has completed running. Deactivating this Option is the equivalent of creating a queue of 1. Note: Messages not queued will be lost.

Type [Y][↵] to activate or [N][↵] to deactivate.

Time Format

Choose: **AM/PM** or **24Hr**

Allen-Bradley Parts

Chapter 8

Serial Communications

Chapter Objectives

This chapter explains the use of the three serial communication ports on the DL40.

Note: The Remote I/O Port is described in Chapter 10. Wiring and cabling instructions appear in Chapter 11.

Introduction

Serial communications with the DL40 are made via three ports located on the back panel of the DL40:

- the RS-232 Port
- the RS-485 Port
- the Keyboard Port

Port Usage

Each port can be used to perform a different set of tasks. A summary of potential uses for each port appears below. You can use the RS-232 Port for:

Uses of the RS-232 Port

- Direct (point to point) uploading or downloading of message files up to 50 feet (15.24 m.). Refer to the *Dataliner DL40 Series Message Display Offline Programming Software User Manual* (Publication 2706-808) for information.
- Reading or writing a DL40's Internal Application Memory from or to a tape.
- Printing the Historical Events Stack.
- Printing messages as they are triggered for display (if the Print Message attribute is set).
- Printing user application file (parameters and messages).
- Test displaying messages.
- Setting DL40 using computer's real time clock.

Uses of the RS-485 Port

- Multi-drop uploading and downloading of message files.
- Communicating to a slave message display.

  Note: To send messages to a slave, Port Use of the RS-485 Port must be set to DL Slave.

- Triggering messages in any run mode.
- Inputting variable data in the Message Variable/Slave Run Mode and Message/Variable Run Mode.
- Dynamically adding or deleting messages to or from the list in Message List Run Mode.
- Test displaying messages.
- Setting DL40 using computer's real time clock.
- Returning [CTRL][X] (ASCII Input) data.

  Note: ASCII Input Data can only be returned via the RS-485 Port if the message was triggered via the RS-485 Port.

ATTENTION: Do not attempt to trigger messages and return ASCII Input Data simultaneously. Doing so will cause both transmissions to become corrupted.

Note: If more than one DL40 is on the RS-485 link and

— if a transmission is in progress to a DL40 and

— if power to a second DL40 is cycled (OFF–ON), the transmission to the DL40 will time out because the DL40 which is powering up temporarily interrupts the link (this does not occur with displays having a firmware revision number of 2.02 or greater).

Uses of the Keyboard Port

Use the Keyboard Port to control a variety of DL40 functions.

Keystroke	Function
[CTRL][T]	Triggering messages
[CTRL][V]	Inputting variables to fill [CTRL][V] callouts
[CTRL][A]	Inputting variables to fill [CTRL][W] callouts
[CTRL][E]	Onboard editing
[CTRL][P]	Printer user application file
[CTRL][S]	Historical Events Stack (viewing or printing)
[CTRL][B]	Backup (tape or memory module)
[CTRL][C]	Clock setting
[CTRL][D]	Debug Mode

You can also use the Keyboard Port for:

- Inputting ASCII Input [CTRL][X] Data.

  Note: ASCII Input Data can only be returned via the RS-485 Port if the message was triggered via the RS-485 Port or via the Remote I/O Port if the message was triggered via the Remote I/O Port.

Allen-Bradley Parts

- Dynamically adding or deleting messages from the list in Message List Run Mode.

Important: Keyboard DIP switch settings on the DL40 must be set to the keyboard being used (XT or AT).

Triggering Messages via Keyboard Port or RS-485 Port

Use the following to understand how to trigger messages in various Run Modes.

Message/Variable/Slave Run Mode

Messages are triggered using the following formats:

[CTRL][T]	Msg. Number	Backslash (\ )	Slave Address	Backslash (\ )	DL40 Address	[↵]

[CTRL][T]	Msg. Number	Backslash (\ )	Backslash (\ )	DL40 Address	[↵]

where:

Data	Acceptable Values
Msg. Number	1 to 4 digits (1 to 9999)
Slave Address	1 to 3 ASCII digits (1 to 127) 0 or null = use slave address selected as a message attribute 127 = all slaves
DL40 Address	1 to 3 digits (0 to 127) 127 = all DL40s on RS-485 link

Note: If 0 or no slave address is input, the slave address selected as a message attribute is used.

Note: The DL40 address is optional if triggering a message via the keyboard. If no DL40 address is sent, the message will be triggered on the DL40 that the keyboard is plugged into. If a DL40 address is specified, the message will run **only** if the address is 127 or if it matches the address of the DL40 that the keyboard is plugged into. If no DL40 address is sent when using the RS-485 link, the message trigger will be ignored.

If no DL40 address is sent, the second backslash (\ ) is optional.

If no Slave Address or DL40 Address is sent, both backslashes are optional.

Note: If the Remote I/O Port is inactive or faulted, the Last State switch (number 8 on SW2) must be ON to trigger messages from the keyboard or via the RS-485 Port.

Message/Variable and Bit Trigger Run Modes

Messages are triggered using the following forms:

[CTRL][T]	Msg. Number	Backslash (\ )	DL40 Address	[↵]

where:

Data	Acceptable Values
Msg. Number	1 to 4 digits (1 to 9999)
DL40 Address	1 to 3 digits (0 to 127) 127 = all DL40s on RS-485 link

Note: The DL40 address is optional if triggering a message via the keyboard. If no DL40 address is sent, the message will be triggered on the DL40 that the keyboard is plugged into. If a DL40 address is specified, the message will run **only** if the address is 127 or if it matches the address of the DL40 that the keyboard is plugged into. If no DL40 address is sent when using the RS-485 link, the message trigger will be ignored.

If no DL40 address is sent, the backslash (\ ) is optional.

Note: If the Remote I/O Port is inactive or faulted, the Last State switch (number 8 on SW2) must be ON to trigger messages from the keyboard or via the RS-485 Port.

Message List Run Mode

Messages are triggered as a Priority Message or added to or deleted from the message list using the following format:

[CTRL][T]	Msg. Number	Backslash (\ )	Function	Backslash (\ )	DL40 Address	[↵]

where:

Data	Acceptable Values
Msg. Number	1 to 4 digits (1 to 9999)
Function	1 ASCII digit (1 to 3) 1 = Priority Message 2 = add message 3 = delete message
DL40 Address	1 to 3 digits (0 to 127) 127 = all DL40s on RS-485 link

Note: The same message number cannot be used twice in the message list.

Note: If no DL40 address is sent, the second backslash (\ ) is optional.

Allen-Bradley Parts

If no address is sent when using the RS-485 link, the message trigger will be ignored.

Note: If the Remote I/O Port is inactive or faulted, the Last State switch (number 8 on SW2) must be ON to trigger messages from the keyboard or via the RS-485 Port.

Inputting Binary/BCD Variables via Keyboard Port or RS-485 Port

For Message/Variable/Slave and Message/Variable Run Modes only. **Note:** Inputting variables via Parallel Port or via Remote I/O Port is described in Chapters 9 and 10.

Variable data to fill [Ctrl][V] callouts (see page 7 – 4) is input using the following format:

[CTRL][V]	Variable Data	Backslash (\ )	Variable Position	Backslash (\ )	DL40 Address	[↵]

where:

Data	Acceptable Values
Variable Data	1 to 5 ASCII digits with an optional leading plus or minus sign (+ or –). Data is for the latest message sent to the specified DL40.
Variable Position	1 or 2 ASCII digits that specify the position of the variable within the message (1 through 10)
DL40 Address	1 to 3 digits (0 to 127) 127 = all DL40s on RS-485 link

Note: If no DL40 address is sent, the second backslash (\ ) is optional. If the 2 backslashes are together:

[CTRL][V]	Variable Data	Backslash (\ )	Backslash (\ )	DL40 Address	[↵]

The variable position is assumed to be 1**.**

If no address is sent when using the RS-485 link, the variable data will be ignored.

Inputting ASCII / BCD Variables via Keyboard Port or RS-485 Port

Note: Whenever using this function to fill [CTRL][W] callouts, always set [CTRL][W] Format to ASCII. See page 6 – 13.

Note: For Message/Variable/Slave and Message/Variable Run Modes only, inputting variables via Parallel Port or Remote I/O Port is described in Chapters 9 & 10.

Data to fill [CTRL][W] callouts is input via the keyboard or RS-485 link using the following format:

[CTRL][A]	ASCII Data	Backslash (\ )	DL40 Address	[↵]

where:

Data	Acceptable Values
ASCII Data	1 to 20 ASCII characters. Data is for the latest message sent to the specified DL40.
DL40 Address	1 to 3 digits (0 to 127) 127 = all DL40s on RS-485 link

Note: The DL40 address is not required for [CTRL][W] data (ASCII Variable Data) entered via the keyboard. If no DL40 address is sent, the backslash (\ ) is optional. If no address is sent when using the RS-485 link, the ASCII data will be ignored.

Inputting ASCII Input Data via the Keyboard Port

When ASCII Input Data is required in a message, the message will have underscored spaces. A flashing cursor will mark the position of the ASCII character.

ASCII Input Data to fill [CTRL][X] callouts is input via the keyboard using the following format:

ASCII (keyboard characters) data [CR]

ASCII Data	[↵]

where:

Data	Acceptable Values
ASCII Data	1 to 20 ASCII characters. Data is for the latest message sent to the specified DL40.

Note: ASCII Input Data can only be returned via the RS-485 Port if the message was triggered via the RS-485 Port or via the Remote I/O Port if the message was triggered via the Remote I/O Port.

Allen-Bradley Parts

Inputting ASCII Input Data via the RS-485 Port

Note: Only for Messages triggered via RS-485 Port. Format for messages triggered via Remote I/O in Chapter 10.

After the message completes running, ASCII data is returned using the following format:

[CTRL][B]	ASCII Data	Backslash (\ )	Msg. Number	Backslash (\ )	DL40 Address	[↵]

where:

Data	Acceptable Values
ASCII Data	1 to 20 ASCII characters. Data is for the latest message sent to the specified DL40.
Message Number	1 to 4 ASCII digits (1 to 9999). Number of the message which received [CTRL][X] (ASCII Input) data.
DL40 Address	1 to 3 digits (0 to 127) Address of the DL40 on which the message was displayed.

Chapter 9

Using the Parallel Port

Chapter Objectives

This chapter will provide you with:

- A description of the Parallel Port.
- Format requirements for the Message Variable/Slave Run Mode and Message List Run Mode.
- Data sampling methods.
- DIP switch settings.

Note: This chapter is applicable only to the Parallel Port Versions of the DL40.

Description of the Parallel Port

The Parallel Port has connections for 4 strobe lines and 16 data lines.

Figure 9.1
Parallel Port Connections

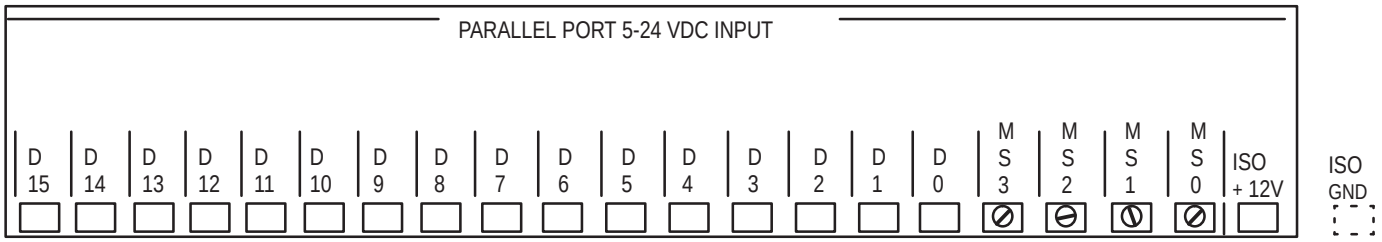

The four strobe lines (MS0–MS3) specify the type of information on the data lines (D0–D15). For Message/Variable/Slave Run Mode, D0–D15 can receive:

- Message number to trigger
- Slave address to which message will be sent
- Variables to be placed in message
  - 16 bit binary
  - 4 digit signed BCD
  - l digit unsigned BCD
  - 1 character ASCII

For Message List Run Mode, D0–D15 can receive:

- Priority msg. number to trigger (interrupts message list)
- Message number to add to message list
- Message number to delete from message list

Allen-Bradley Parts

Table 9.A
Relative significance of each data line

D15	D14	D13	D12	D11	D10	D9	D8	D7	D6	D5	D4	D3	D2	D1	D0
MSB															LSB

Selecting Data Format

The parallel port uses either the binary numbering system or the Binary Coded Decimal (BCD) numbering system to transfer message numbers and [CTRL][V] (formatted) variables. It uses BCD or ASCII for [CTRL][W] (unformatted) variables. You must select which numbering system best suits your needs, and then set the parallel port to the selected data format using the Onboard Editor or Offline Programming Software.

Each numbering system, binary or BCD, has its own merits. Your choice will often be based upon the format used by your controller. However, the use of binary numbers to input variables allows you to use variable data in the range of –32,768 to +32,767 (2's complement binary). If you use BCD numbers to input variable data, the variable may range in value from –9,999 to +9,999.

Using Binary Data Input

A data line may either be at ground level or have a voltage present. The convention of having a voltage represent a value of 1 and ground representing a value of 0, is known as High True Logic. The opposite convention is called Low True Logic. You can set the DL40 to accept either High True or Low True Logic using the Offline Programming Software. Table 9.B shows the value of each data line.

Table 9.B
Binary Value of Data Lines

Data Line	D15	D14	D13	D12	D11	D10	D9	D8	D7	D6	D5	D4	D3	D2	D1	D0
Data Line Value	32768	16384	8192	4096	2048	1024	512	256	128	64	32	16	8	4	2	1
	MSB															LSB

For example, assume the following logic levels appear as shown in Table 9.C.

Table 9.C
Sample value obtained by summing the binary value of each data line's logic level

Data Line		Logic Level		Value
D0	=	Logic 1	=	1
D1	=	Logic 0	=	0
D2	=	Logic 0	=	0
D3	=	Logic 0	=	0
D4	=	Logic 1	=	16
D5	=	Logic 0	=	0
D6	=	Logic 0	=	0
D7	=	Logic 1	=	128
D8	=	Logic 0	=	0
D9	=	Logic 0	=	0
D10	=	Logic 0	=	0
D11	=	Logic 0	=	0
D12	=	Logic 0	=	0
D13	=	Logic 0	=	0
D14	=	Logic 0	=	0
D15	=	Logic 0	=	0
		Sum of all values		145

Adding the values of the individual data lines provides the value being entered, *145*.

Using BCD Data Input

The 16 data lines can also be used to input BCD data. The BCD numbering system uses a group of four binary digits to represent a single decimal digit. Table 9.D shows the value of each data line.

Table 9.D
BCD Value of Data Lines

Data Line	D15	D14	D13	D12	D11	D10	D9	D8	D7	D6	D5	D4	D3	D2	D1	D0
Data Line Value	8000	4000	2000	1000	800	400	200	100	80	40	20	10	8	4	2	1

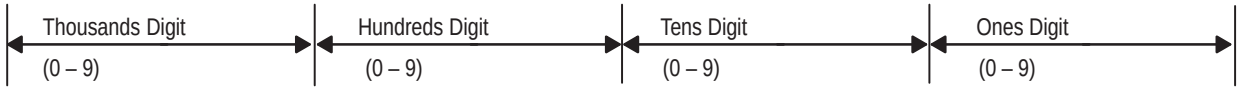

For example, assume the following logic levels appear as shown in Table 9.E.

Allen-Bradley Parts

Table 9.E
Sample value obtained by summing the BCD value of each data line's logic level

Data Line		Logic Level		Value
D0	=	Logic 1	=	1
D1	=	Logic 0	=	0
D2	=	Logic 1	=	4
D3	=	Logic 0	=	0
D4	=	Logic 0	=	0
D5	=	Logic 0	=	0
D6	=	Logic 1	=	40
D7	=	Logic 0	=	0
D8	=	Logic 1	=	100
D9	=	Logic 0	=	0
D10	=	Logic 1	=	400
D11	=	Logic 0	=	0
D12	=	Logic 1	=	1000
D13	=	Logic 0	=	0
D14	=	Logic 1	=	4000
D15	=	Logic 0	=	0
		Sum of all values		5545

Adding the values of the individual data lines provides the value being entered, in this case *5545*.

Logic Voltage Levels

Each parallel input interprets two voltage levels: ON or OFF. There is also a third state which should be avoided, an "I don't know" or "indeterminate" state. The "indeterminate" state occurs when the voltage is between the ON voltage range and the OFF voltage range. Table 9.F lists the voltage levels and their logic values.

Table 9.F
Input Voltage Ranges and Their Logic Values

Voltage Range	High True Logic	Low True Logic
0 – 0.8 VDC	0 (OFF)	1 (ON)
0.8 – 3.5 VDC	Indeterminate	Indeterminate
3.5 – 24 VDC	1 (ON)	0 (OFF)

You can select either the High True or Low True Logic using the Offline Programming Software.

Note: You can use 120 volt AC/60 Hz input voltages if two Catalog Number 2706-NG2 Input Converters are used.

The parallel port is compatible with Allen-Bradley's DC Output Modules (Catalog No. 1771-OB, 1746-OB8, or 1746-OB16) and AC Output Module (Catalog No. 1771-OA). Two 2706-NG2 AC input converters are required

with the AC Output Module. The ISO +12V connection can be used to power the DC connections of the 2706–NG2 AC input converters.

Message/Variable/Slave Run Mode

Triggering rules:

- When used, optional slave address must always **precede** the message number.
- Up to 10 variables are addressable within a message.
- Variables must always **follow** the message number.
- Variables sent are always associated with the last message triggered:
  - if the message is in the queue, variables will be put into the queue (with the message) and onto the Historical Events Stack.
  - if message is running and variable is being displayed, the variable will be updated with the latest data this data will also be put onto the Historical Events Stack.
  - if message is running and variable is no longer being shown (as in a scrolling message), updated data will not be shown but will be put on Historical Events Stack.
  - if message has completed running, updated data is lost to display and to the Historical Events Stack.

- BCD Sign Bit

  Only valid for [CTRL][V] BCD variables; **not** valid for [CTRL][W] BCD.

  - Set = –
  - Clear = +

  Note: For BCD variables only. Ignored for binary and ASCII variables. To sign a binary variable, use 2's complement.

  - Sign bits **must** precede variables. The sign cannot be changed without resending the variable.
  - Bit 0 = Variable l
  - Bit 1 = Variable 2, etc.
  - Bits 9 = 15 ignored
  - No Sign Bit sent (default) = +

Allen-Bradley Parts

Table 9.G
Strobe line states specify type of data on the data lines

MS3	MS2	MS1	MS0	Data Type
0	0	0	0	null
0	0	0	1	D0–D15 contain the message number
0	0	1	0	D0–D15 contain the slave address
0	0	1	1	D0–D9 BDC sign bits for (Ctrl V) variables 1–10
1	0	0	0	D0–D15 contain variable 1
1	0	0	1	D0–D15 contain variable 2
1	0	1	0	D0–D15 contain variable 3
1	0	1	1	D0–D15 contain variable 4
1	1	0	0	D0–D15 contain variable 5
1	1	0	1	D0–D15 contain variable 6
1	1	1	0	D0–D15 contain variable 7
1	1	1	1	D0–D15 contain variable 8
0	1	1	0	D0–D15 contain variable 9
0	1	1	1	D0–D15 contain variable 10

The number you assign to a variable by setting strobe lines does not necessarily correspond to the position of the variable in a message. The DL40 expects to see all [CTRL][V] variables numbered before [CTRL][W] variables.

Triggering Rules example:

If a message has variables **positioned** as follows:

[CTRL][V]	[CTRL][W]	[CTRL][V]	[CTRL][W]	[CTRL][V]
First Position	Second Position	Third Position	Fourth Position	Fifth Position

they **must** be numbered:

[CTRL][V] first position = Variable 1

[CTRL][V] third position = Variable 2

[CTRL][V] fifth position = Variable 3

[CTRL][W] Second and fourth position = Variable 4 (See NOTE below)

If the variables were not numbered as shown, they would be displayed in wrong positions and possibly corrupted.

Note: **[CTRL][V]** variables **always** use a (16 bit) *word*;
[CTRL][W] variables **do not** use a full (16 bit) *word.*

- If [CTRL][W] variables are ASCII (8 bit) variables, [CTRL][W] second position would be sent in the high byte of Variable 4; fourth position would be sent in the low byte of Variable 4.
- If [CTRL][W]s are BCD (4 bit) variables, the [CTRL][W] in the second position would be sent in the high nibble of the high byte of Variable 4;

the [CTRL][W] in the second position would be sent in the low nibble of the high byte of Variable 4. The low byte of the Variable 4 would be ignored (unless the message contained more BCD variables).

Message List Run Mode

In the Message List Run Mode, messages are continually being displayed by the DL40. Messages can be added to or deleted from the message list while the list is running. In addition, Priority Message Numbers can be sent to override the message list.

The 4 strobe lines specify an instruction to be performed.

MS3	MS2	MS1	MS0	Data Type
x	x	0	0	null
x	x	1	0	D0–D15 contain a message number to add to list.
x	x	0	1	D0–D9 contain the number of a Priority Message.
x	x	1	1	D0–D15 contain a message number to delete from list.

x = Ignored

Sampling

While the DL40 is in Run or Debug Mode, it regularly monitors the 20 lines on the parallel port. Input data is only considered valid when all lines remain unchanged for the time specified by Data Hold Time in the Triggering Port Setup.

You must insure that any data sent to the DL40 is held stable for at least as long as the Data Hold Time. If there are any switching delays on the lines, data must be held for the length of the Data Hold Time plus delay time.

Since the DL40 has a feature which prevents a message number or variable from being entered more than once, there is no problem holding data for longer periods of time. When a DL40 reads the data at the parallel port, a copy of the data is retained. If the next reading during the sample interval is the same, the DL40 will ignore the second sampling, preventing the same data from being sent to the queue more than once per scan. If you want to re–trigger a message or variable, MS0–MS3 lines should be set too for a minimum of 5 msec (plus switching delay time).

Allen-Bradley Parts

AC Sampling

Important: To input AC into the Parallel Port, two AC to DC Converters (Catalog Number 2706–NG2) must be used. When using a converter, Using AC/DC Converter in the Triggering Port Setup must be set to Yes. This will prevent Data Hold Time from being set to less than 40 msec. Conversion time must be added to the Data Hold Time.

34 msec	NG2 conversion time
+	Data Hold Time (40 msec minimum)
	Total hold time for your data

Chapter 10

Using Remote I/O

Chapter Objectives

This chapter discusses communication and compatibility considerations related to using the DL40 Message Display with programmable controllers. Topics also include the Remote I/O architecture and factors in calculating rack size, as well as triggering messages.

Communication

The Remote I/O version of the DL40 Message Display communicates with all Allen-Bradley programmable controllers that support the Remote I/O link.

These displays communicate with PLC controllers and Remote I/O scanners and sub-scanners as if they were a Remote I/O rack. The displays contain all the necessary electronics to connect directly to the Remote I/O cable that originates from a PLC, scanner, or sub-scanner. These scanners have both physical and logical specifications which are as follows:

Physical Specifications – The maximum number of separate Remote I/O devices (I/O racks, drive systems, DL40s, etc.) the scanner can communicate to.

Logical Specifications – The maximum number of racks the scanner can address.

Note: Different scanners have different physical and logical specifications. Please refer to Table 10.E (Remote I/O Configuration) for these specifications.

To configure DL40s with the PLC controllers you need to know:

1. The appropriate PLC or scanner module. This is found in the next section, Remote I/O Architecture.
2. The amount of I/O the DL40 uses for different applications.
3. The number of chassis (1771 I/O racks or DL40s) and the amount of rack I/O addressing the scanner can accommodate.

Allen-Bradley Parts

Remote I/O Architecture

The following diagrams show applications using the DL40 in systems with applicable PLCs and scanners.

Figure 10.1
DL40s with PLC–2/20 or PLC 2/30 with Remote I/O

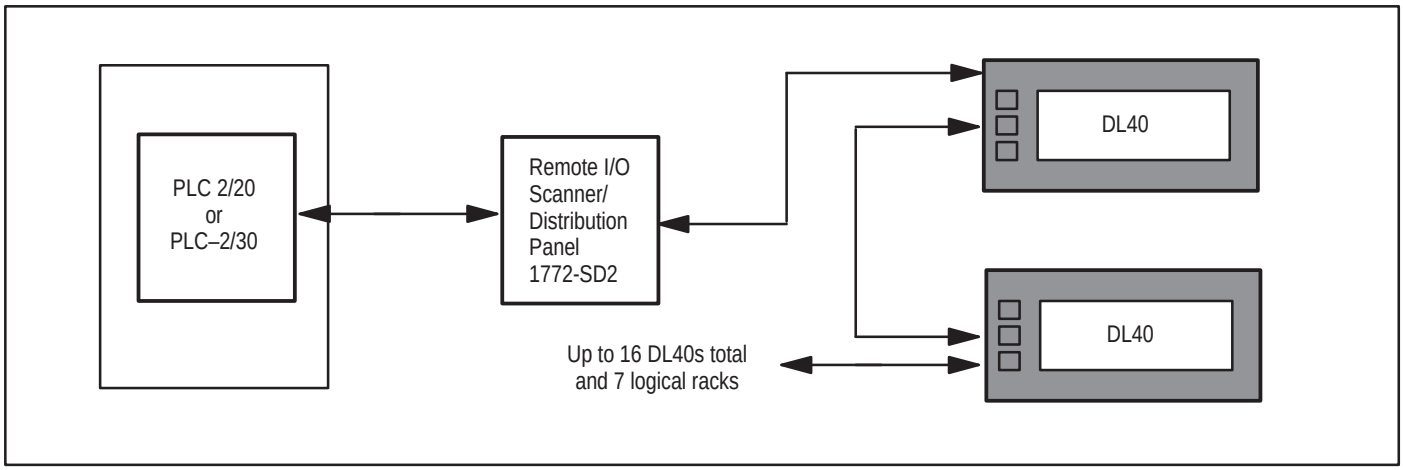

Figure 10.2
DL40s with PLC 2/05, PLC 2/15, PLC 2/16, PLC 2/17, PLC 5/12

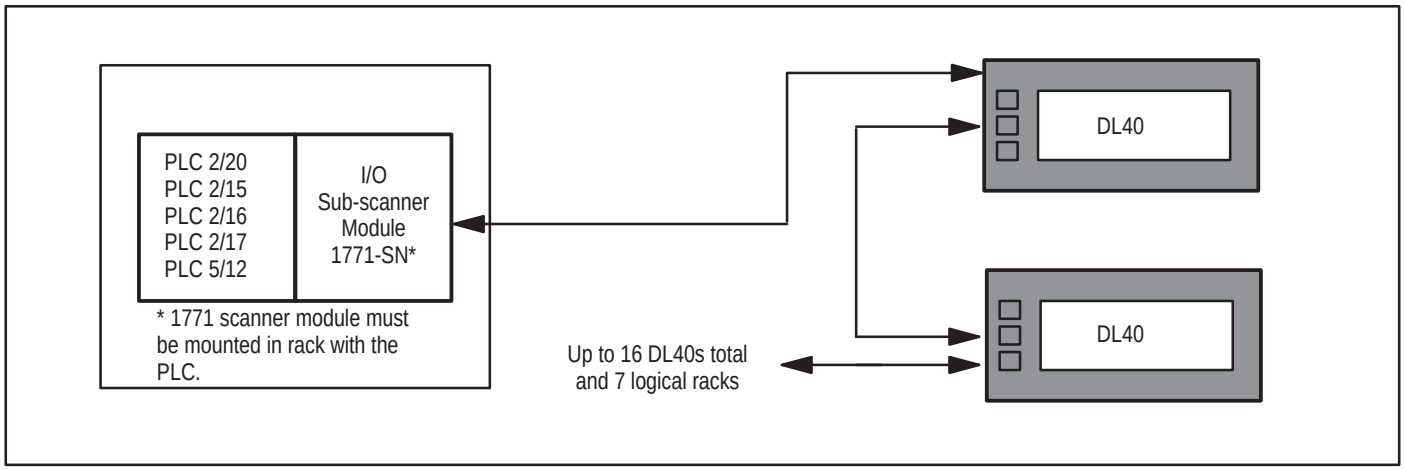

Figure 10.3
DL40s with PLC 3

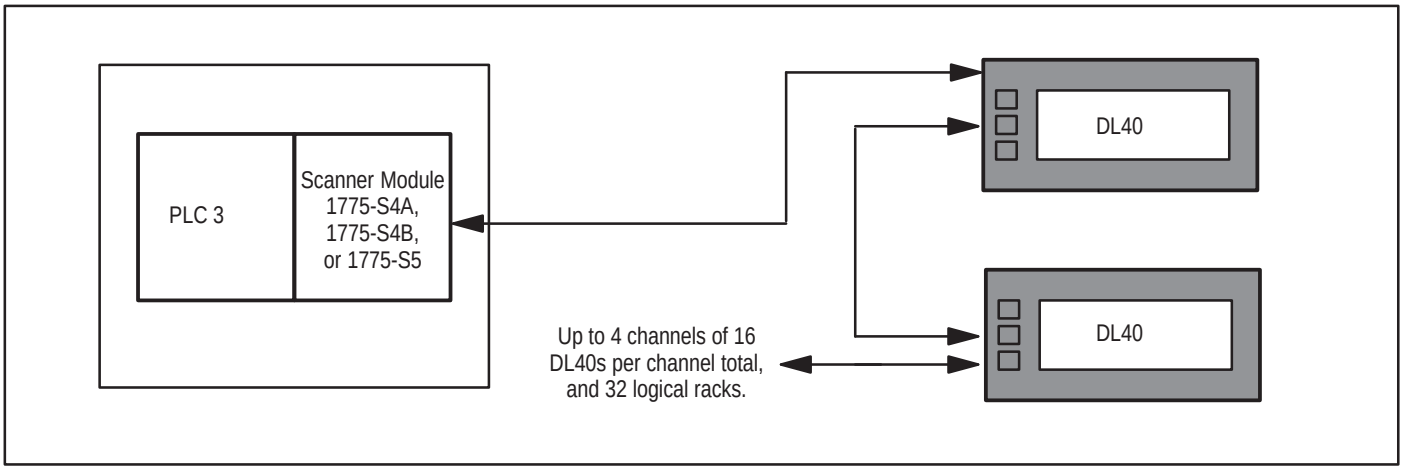

Figure 10.4
DL40s with PLC 3/10

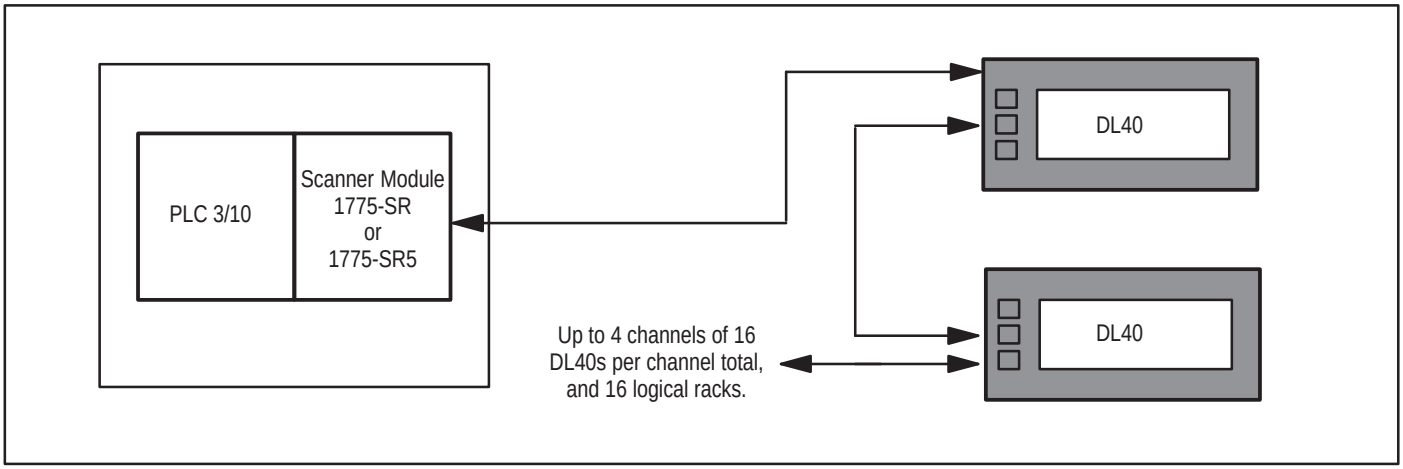

Allen-Bradley Parts

Figure 10.5
DL40s with PLC 5/250

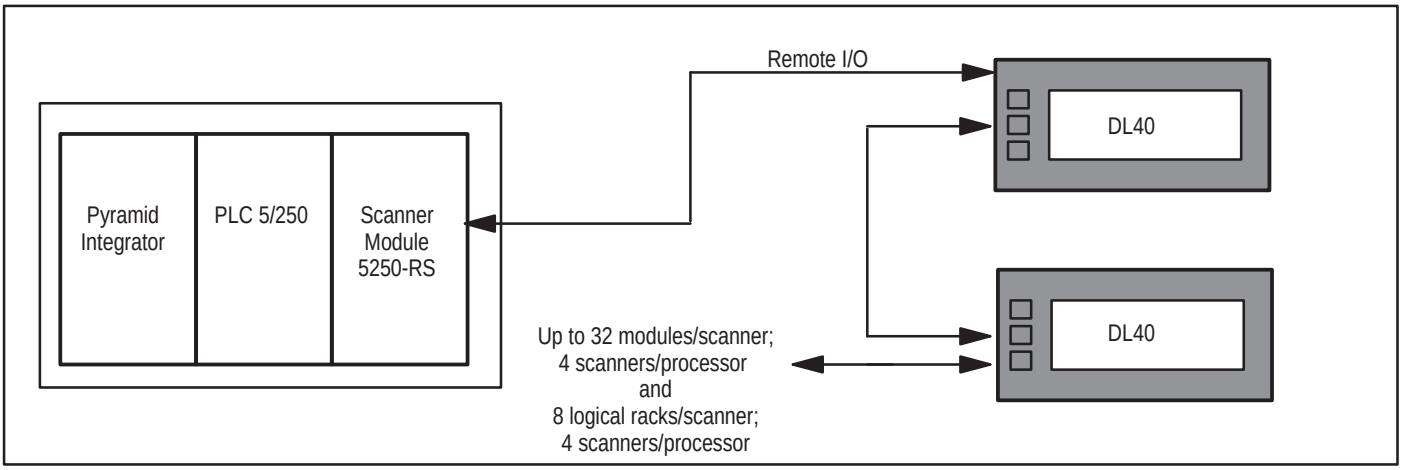

Figure 10.6
DL40s with PLC 5/11, -5/15, -5/20,-5/25, -5/30, -5/40, -5/60, or -5/80

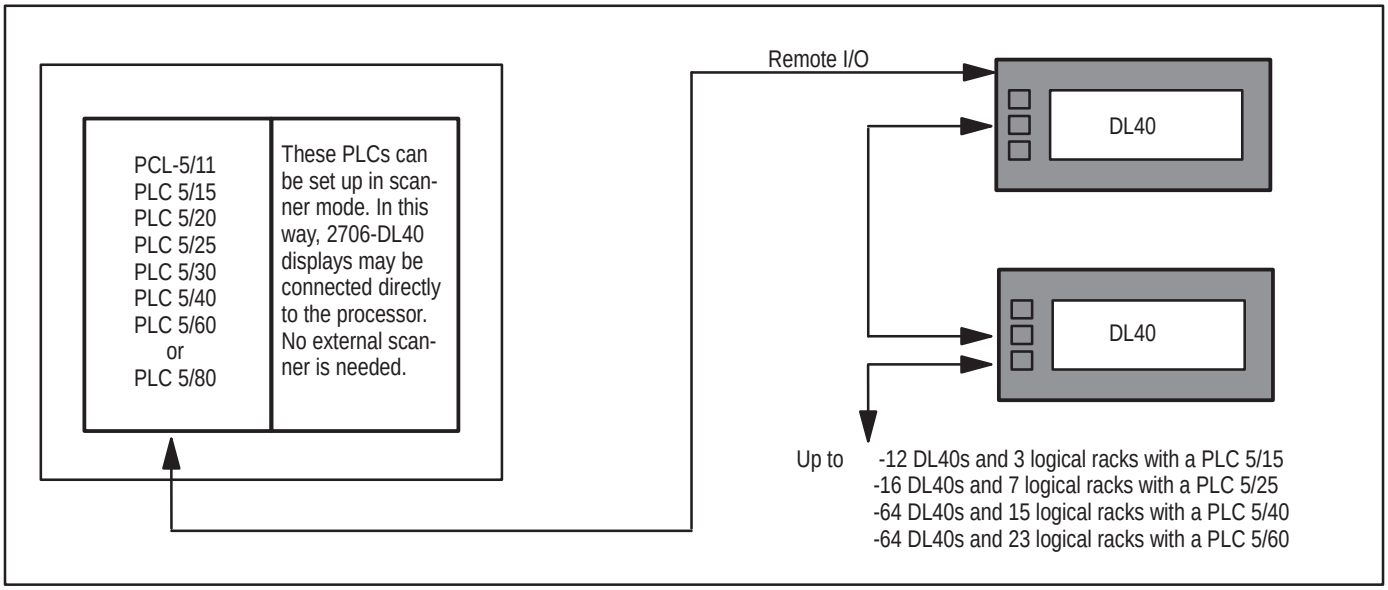

The PLC 5/11, -5/15, -5/20, -5/25, -5/30, -5/40, -5/60, and -5/80 have built-in Remote I/O scanners.

Like all scanners, built-in scanners have both physical and logical specifications. See Table 10.D on page 10-7.

Figure 10.7
DL40s with SLC 5/01, 5/02, 5/03, 5/04

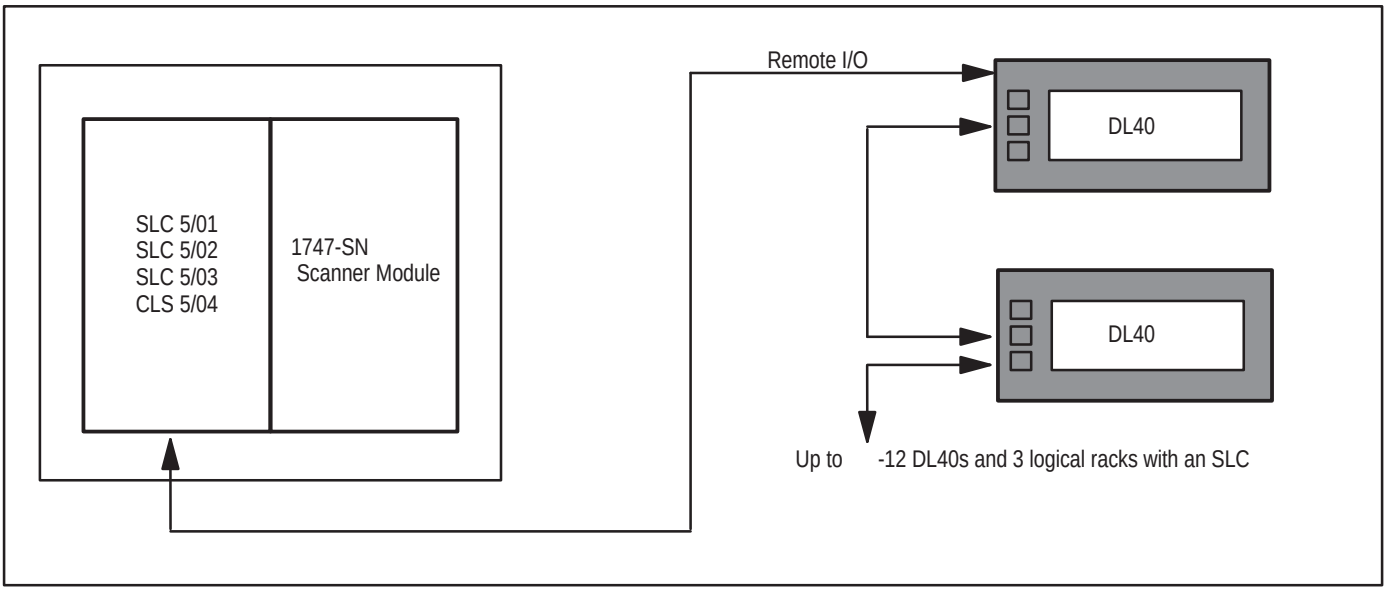

Note: The SLC Series B Scanner Module (Catalog No. 1747-SN) will allow Block Transfers. Series A units will allow only Discrete Bit Transfers.

Physical vs. Logical

To further explain Physical and Logical specifications, and to help you properly configure your Remote I/O architecture, please refer to the following example:

A typical valid Remote I/O configuration for PLC 5/15 would be:

(4) 1/4 racks, (2) 1/2 racks and (1) full rack
Total devices = 4 + 2 + 1 = 7 devices.
This configuration is within the physical specification of 12 for the PLC 5/15.

Note: PLC 5/15 Series B, Revision H or later have partial rack addressing. Earlier versions were limited to full racks.

4 x 1/4 racks	=	1 logical rack
2 x 1/2 racks	=	1 logical rack
1 full rack	=	1 logical rack
	=	3 logical racks

The example given is also within the 3-rack logical limitation of the PLC 5/15.

Allen-Bradley Parts

An invalid Remote I/O configuration for a PLC 5/15 would be:

(8) 1/2 racks.

Although 8 is less than the 12 device physical specification, (8) x 1/2 = 4 logical racks which is greater than the PLC 5/15's 3 rack logical specification. Therefore (8)1/2 racks is an invalid Remote I/O configuration for the PLC 5/15.

A sub-scanner may be used with any PLC 5/15. It allows the PLC 5/15 to communicate with up to 7 logical racks and a maximum of 16 devices, or chassis, as they are commonly called.

The DL40 is compatible with all Allen-Bradley scanners that support Remote I/O.

Corresponding Publications for Processors and Scanners

Tables 10.A, 10.B, and 10.C list applicable PLCs and their respective scanners.

Table 10.A
Applicable Programmable Controllers

Catalog Number	Description	Related Pub. No.
1772-LP1	PLC 2/20	1772-6.8.1
1772-LP2	PLC 2/20	1772-6.8.1
1772-LP3	PLC 2/30	1772-6.8.3
1775-L1, L2	PLC 3	1775-6.4.1
1775-LP4 LP8	PLC 3/10	1775-2.20-DUI
1785-LT	PLC 5/15	1785-6.8.2
1785-LT2	PLC 5/25	1785-6.8.2
5250-LP1,-LP2	PLC 5/250	5000-2.17

Table 10.B
Applicable Programmable Controllers Requiring a 1771-SN Sub-Scanner

Catalog Number	Description	Related Pub. No.
1772-LS, LSP	Mini-PLC 2/05	1772-6.8.6
1772-LV	Mini-PLC 2/15	1772-6.8.2
1772-LX, LXP	Mini-PLC 2/16	1772-2.26
1772-LW, LWP	Mini-PLC 2/17	1772-2.25
1772-LN	Mini-PLC 2	1772-6.8.4
178I-LT3	PLC 5/12	1785-6.8.2

* The 1771–SN Sub–Scanner may be used with any PLC–2 or PLC–5 family processor.

Table 10.C
Applicable Small Logic Controllers Requiring a 1747-SN Sub-Scanner

Catalog Number	Description	Related Pub. No.
1747-L511, -L524	SLC 5/01	1747-6.2
1747-L524	SLC 5/02	1747-6.2
1747-L532	SLC 5/03	1747-6.2
1747-L542	SLC 5/04	1747-6.2

Table 10.D
Applicable Scanners

Catalog Number	Description	Related Pub. No.
1772-SD, SD2*	Remote scanner/distribution panel for PLC 2 family.	1772-2.18
1771-SN	Sub I/O scanner module for PLC 2 and PLC 5/15 families.	1771-2.91
1775-SR, SR5	I/O Scanner Communication Adapter Module for PLC 3/10 family.	1772-2.22
1775-S4A		1775-6.5.2
1775-S4B	I/O scanner-programmer interface module for PLC 3 family.	1775-6.5.3
1775-S5		1775-6.5.5
1785	I/O scanner-message handling module for PLC 5/15 & 5/25	1785-6.6.1
		1785-6.8.1
5250-RS	Remote scanner for PLC 5/250	5000-2.17
6008-SI	IBM PC I/O Scanner Module	6008-6.5.3
6008-SV	VME Bus I/O Scanner Module	6008-6.5.2

* Scanner 1772-SD2 Rev. 3 or later.

Remote I/O Configuration

Once you have selected the appropriate scanner for a PLC controller, use Table 10.E to find out how many separate chassis or devices that scanner can support and how much I/O it can address.

Note: For any application, the total of all the I/O used by each device (I/O rack, drive system, or DL40) connected to the cable gives the number of full racks of I/O being supported by the scanner or sub-scanner for that application.

Allen-Bradley Parts

Table 10.E
Remote I/O Configuration

PLC Processors	Scanners		1771–SN Sub–Scanners	
	Physical	Logical	Physical	Logical
Mini-PLC's 2/05 215 2/16 2/17	—	—	16 Devices①	7 Racks
PLC 5/11	4 Devices	4 Racks	16 Devices①	7 Racks
PLC 5/12	—	—	16 Devices①	7 Racks
PLC 5/15②	12 Devices	3 Racks	16 Devices①	7 Racks
PLC 5/20③	16 Devices	4 Racks	16 Devices①	7 Racks
PLC 5/25③	16 Devices	7 Racks	16 Devices①	7 Racks
PLC 5/30	28 Devices	8 Racks	16 Devices①	7 Racks
PLC 5/40	16 Devices/channel 4 Channels/scanner	15 Racks	16 Devices①	7 Racks
PLC 5/60	16 Devices/channel 4 Channels/scanner	23 Racks	16 Devices①	7 Racks
PLC 5/80	24 Devices/channel 4 Channels/scanner	32 Racks	16 Devices①	7 Racks
PLC 5/250	32 Devices/scanner 4 Scanners/processor	8 Racks/Scanner 4 Scanners/processor	16 Devices①	7 Racks
PLC 2/30	16 Devices/ channel 2 Channels/scanner	7 Racks total	16 Devices①	7 Racks
PLC 3	16 Devices/channel 4 Channels/scanner	32 Racks (64 using complimentary I/O)	16 Devices①	7 Racks
PLC 3/10	16 Devices/channel 4 Channels/scanner	16 Racks total	16 Devices①	7 Racks

① Two of these may be Bulletin 1771 chassis.
② PLC 5/15 Series B Revision H or later have partial rack addressing. Earlier versions were limited to (3) devices.
③ PLC 5/25 Series A Revision D or later have partial rack addressing. Earlier versions were limited to (7) devices.

Triggering Messages

With the Remote I/O version of the DL40, messages are normally triggered from a PLC connected to the DL40. However, messages can also be triggered via the Keyboard Port or the RS-485 Port.

DIP Switch 2-4 Enables or Disables Block Transfers.

- Discrete I/O (Block Transfers Disabled)
  - Block Transfers are ignored.
  - Amount of data sent/returned depends on rack size.

- Block Transfer Enabled
  - Data in Discrete I/O Image Tables ignored.
  - Amount of data sent/returned independent of rack size.

Triggering the Same Message Twice in a Row

To avoid needless retriggering of a message via the I/O scan, the DL40 looks for changes to the Message Number in the Output Image or Block Transfer Write to trigger messages. To trigger the same message twice in a row, you must:

- trigger the message the first time.
- trigger a message with a Message Number of 0.
- trigger the original message a second time.

Note: In Message/Variable/Slave Run Mode, changing the slave address will also retrigger the same message.

Returning Data to the PLC

The DL40 returns two types of data to a PLC:

- ASCII Input Data
- Clock/Date Data

ASCII Input Data

The DL40 returns ASCII Input Data during the PLCs I/O scan as part of the Input Image Table or Block Transfer Read Data Table. This happens automatically unless you request that Clock/Date Data be returned. You can input ASCII Input Data only via the keyboard port. This data is cleared after one scan or read.

Clock/Date Data

There are two ways to request the DL40 return Clock/Date Data:

- Set Always Send Clock Data to yes.

  Note: Always Send Clock Data is a parameter of the Triggering Port Setup for Remote I/O.
- Trigger Special Message 912 (time) or 913 (date).

Note: The PLC must internally keep track of which Special Message was triggered to determine if time or date data is being returned.

Allen-Bradley Parts

The DL40 will continue to return Time/Date Data as a response to Special Message 912 or 913:

- for 100 milliseconds if *Hardware* handshaking is not set

  or

- until the DL40 receives acknowledgement that the PLC has received the data if *Hardware* handshaking is set.

Whenever Clock/Date Data is being returned to the PLC, the *Clock/Date Data Bit* in the Input Image Table will be set.

Sending Variables

When variables are sent, **all** [CTRL][V] (formatted) variables must be sent *first* followed by [CTRL][W] (unformatted) variables.

NOTE: In the text of this manual, the up caret, **^**, may be used in place of the **[CTRL]** key where space requires. For example, **^W** means the same as **[CTRL][W]**.

Example:

If a message has variables **positioned** as follows:

[CTRL][V]	[CTRL][W]	[CTRL][V]	[CTRL][W]	[CTRL][V]
First Position	**Second Position**	**Third Position**	**Fourth Position**	**Fifth Position**

and [CTRL][W] variables are ASCII, they would be sent in the following order:

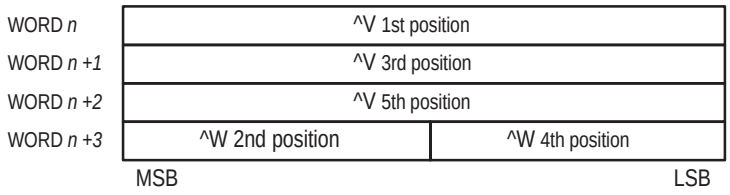

If [CTRL][W] variables are BCD variables, word *n+3* would look like:

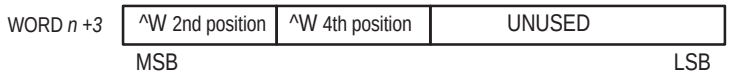

Definitions

The following definitions apply universally for all I/O tables in this chapter:

- **Acknowledge Bit**
  This bit is set by the DL40 whenever the *MSG ACK* Push Button (on the front panel) is pressed after the message has completed running and the Acknowledge Attribute for the message is set. It indicates that an operator has physically acknowledged a message triggered by the PLC.
- **Add/Delete Bit** (only for Message List Run Mode)
  Bit set = adds Message Number (in word 1) to Message List.
  Bit Clear = deletes Message Number (in word 1) from Message List.
- **ASCII Character**
  One byte characters you input via the DL40 Keyboard Port. These are only valid for messages that have ASCII Input Data [CTRL][X] callouts.
- **BCD Sign Bit**
  Only valid for [CTRL][V] BCD variables; **not** valid for [CTRL][W] BCD.

Bit Set	=	–
Bit Clear	=	+

  Note: For BCD variables only. This bit is ignored for binary and ASCII variables. To sign a binary variable, use 2's complement.
- **Clock/Date Data Bit**
  This bit is set by the DL40 to indicate that either clock data (hour–minute–second) or date data (month–day–year) is being returned to the PLC. You request clock or date data by triggering Special Message 912 (or 12) or 913 (or 13), or by setting the Always Send Clock file attribute. This bit will never be set for returning Message Number to a PLC.
- **Diagnostic Code**

Bit 10 Set	=	Display is not in the Run Mode
Bit 10 Clear	=	Display is in the Run Mode
Bit 11 Set	=	Message buffer (queue) is full
Bit 11 Clear	=	Message buffer (queue) is not full
Bit 12	=	Reserved
Bit 31 Set	=	Display not operating properly
Bit 31 Clear	=	Display operating properly

- **Enter Bit**
  Bit set after all ASCII Input Data a message requires has been input into a message. It is only after this bit is set that ASCII Input Data should be considered valid.

Allen-Bradley Parts

- **Handshake Bit**

  The Handshake Bit provides an indication to the sender (either the DL40 or the PLC) that the Image Table (either Output or Input) was received by the receiver. Handshaking is selected by setting the Handshake DIP switch on the back of the unit. See page 28 of this chapter for a complete explanation.

- **Hour-Minute-Second/Month-Day-Year**

  Each is a 2 digit BCD number with time or date data returned to a PLC.

- **Length of Message List**

  Applies only in Message List Run Mode. An 8-bit binary number between 0 and 20 indicating length of the Message List.

- **Message Number**

  Note: See Triggering Port Setup for information on selecting BCD or binary format.

  – **Message/Variable/Slave or Message/Variable Run Mode**

  Output Image Table or Block Transfer Write – number of message to be triggered on the DL40.

Output Image Table	Acceptable Values
$^1/_4$ or $^1/_2$ rack (equals 12-bit)	0 to 999 in BCD format 0 to 4095 in binary format
$^3/_4$ or full rack (equals 16-bit)	0 to 9999 in BCD format 0 to 9999 in binary format **Note:** 0 = no message triggered
Block Transfer Write	
Any size rack (equals 16-bit)	0 to 9999 in BCD format 0 to 9999 in binary format **Note:** 0 = no message triggered

  Input Image Table or *Block Transfer Read* – number of message currently running on the DL40.

Input Image Table or Block Transfer Read	Acceptable Values
Any size rack (equals 16-bit)	0 to 9999 in BCD format 0 to 9999 in binary format **Note:** 0 = no message running

  – **Message List Run Mode**

  Output Image Table or *Block Transfer Write* – number of message to be added/deleted to/from the message list.

Output Image Table or Block Transfer Write	Acceptable Values
Any size rack (equals 16-bit)	0 to 9999 in BCD format 0 to 9999 in binary format **Note:** 0 = no message added or deleted

Input Image Table or *Block Transfer Read* – number of message currently running on the DL40.

Input Image Table or Block Transfer Read	Acceptable Values
Any size rack (equals 16-bit)	0 to 9999 in BCD format 0 to 9999 in binary format **Note:** 0 = no message running

- **Priority Message Number –** only in Message List or Bit Trigger Run Mode

  Note: See Triggering Port Setup for information on selecting BCD or binary format.

  12 or 16 bit number of Priority Message.

  0–999 (12 bit); 0–9999 (16 bit) in BCD

  0 to 4095 (12 bit); 0–9999 (16 bit) in binary (0 = no Priority Message to run)

  Note: When a priority message trigger is received, its queued as in the Message/Variable/Slave Run Mode. When the message that is currently displayed finishes running, all Priority Messages in the queue will be run.

- **Priority Section**

  Up to 31 words long. Length selected in Programming Software.

  Note: If the Bit Trigger Priority Size is set to 0 (i.e. Bit Trigger Table has no Priority Section), the Round Robin Section starts with Message Number 1.

- **Round Robin Section**

  Up to 31 words long. Length equals the total length minus the length of the Priority Section. The first message number in the Round Robin Section follows consecutively after the last message number in the Priority Section.

- **Slave Address**

  Slave address for Message/Variable/Slave Run Mode. Data will be in same format as Message Number above. Variable Data cannot be used.

- **Variable Data**

Callouts	Acceptable Values
[CTRL][V]	0 to 9999 in BCD format (+ / –, depending on BCD Sign Bit) –32,768 to +32,768 fir signed (twos complement) binary
[CTRL][W]	0 to 99 for ASCII – 8-bit (2 per word) first variable in high byte 0 to 9999 for BCD – 4-bit (4 per word) first variable in high nibble of high byte

Allen-Bradley Parts

- **Variable Data (+)**
  Can only be used in the *Message / Variable Run Mode*.
- **Variable Data Number**
  For Discrete I/O, $^1/_4$ Rack only. Binary number – sets position of variable data in message:

  0 = First variable in the message
  1 = Second variable in the message
  2 = Third variable in the message
  3 = Fourth variable in the message

Message/Variable/Slave and Message/Variable Run Modes

The following illustrates the format of the PLC Input and Output Image Tables and Block Transfer Read and Write files.

Discrete I/O

Triggering a Message

Message/Variable/Slave and Message/Variable are the same except:

- In *Message / Variable / Slave* Run mode, the last word (for $^1/_2$, $^3/_4$, full rack only) of the Output Image Table is **always** interpreted as the slave address no matter what slave address was chosen as a message attribute.
  Note: 0 = use slave address selected as a message attribute.
- In *Message Number* / *Variable Run* mode, the Output Image Table has no slave address and the slave address selected as a message attribute is always used.

Output Image Table - 1/4 rack

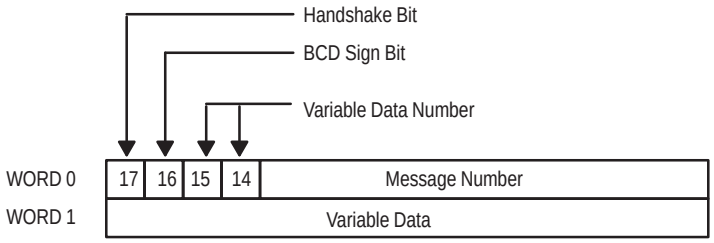

Output Image Table - 1/2 rack

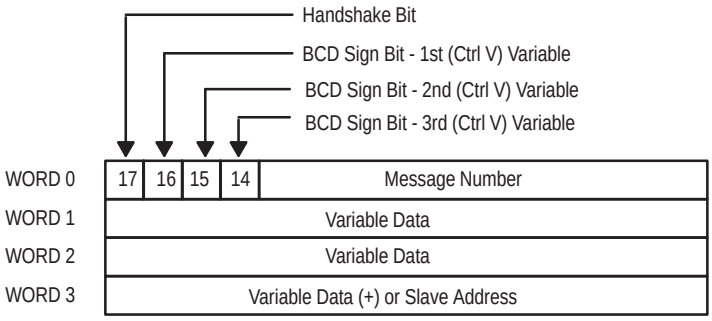

Output Image Table - 3/4 rack

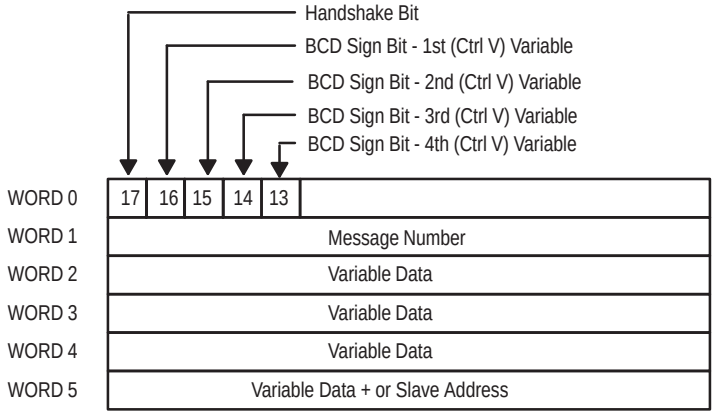

Output Image Table - Full Rack

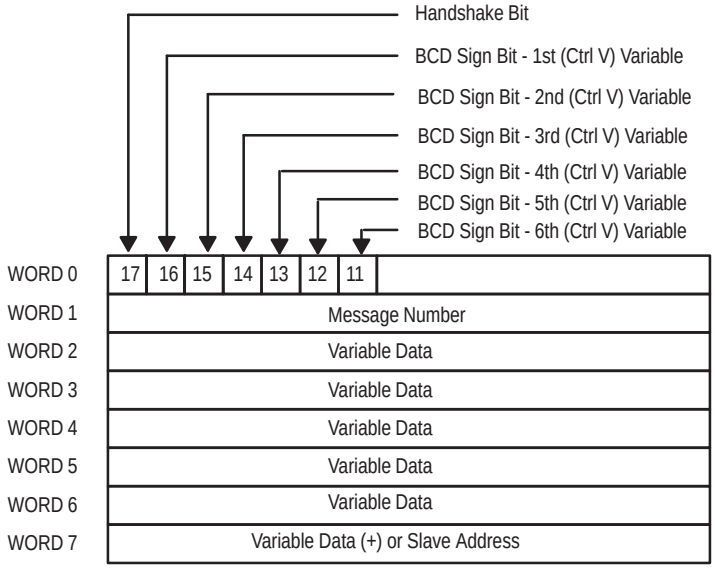

Allen-Bradley Parts

Return Message Number and ASCII Data for Message Displayed to PLC

Input Image Table - 1/4 rack

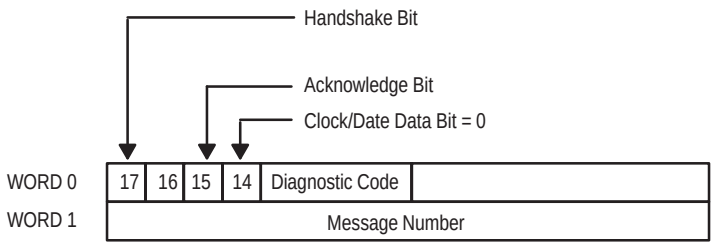

Input Image Table - 1/2 rack

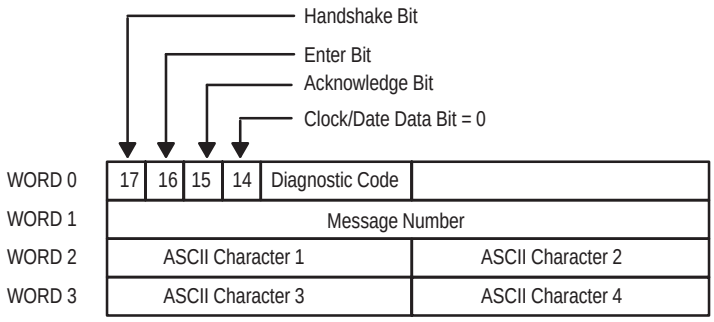

Input Image Table - 3/4 rack

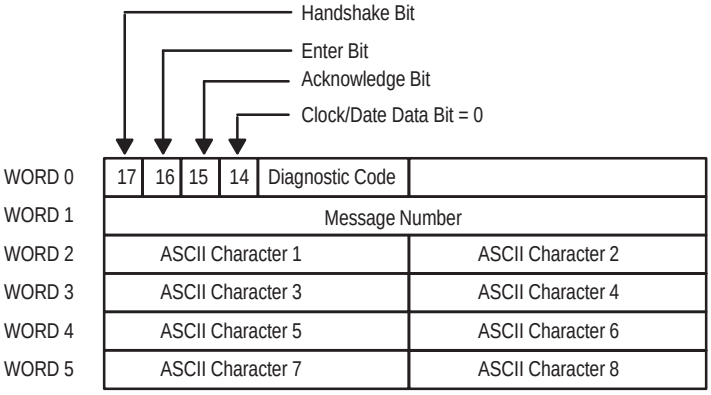

Input Image Table - Full rack

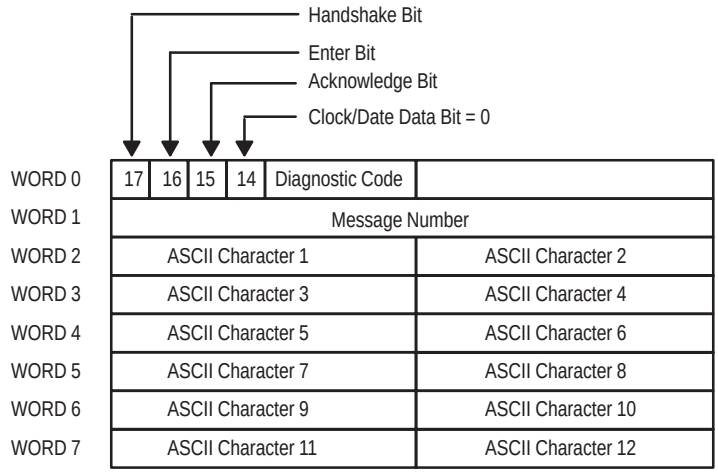

Return Clock or Date Data to PLC

Input Image Table - 1/4 rack

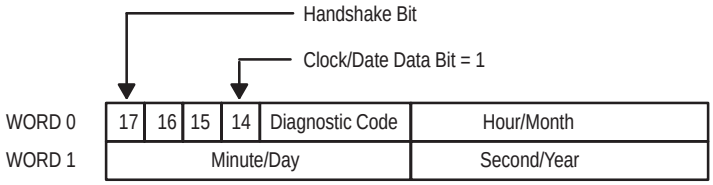

Input Image Table - 1/2 rack

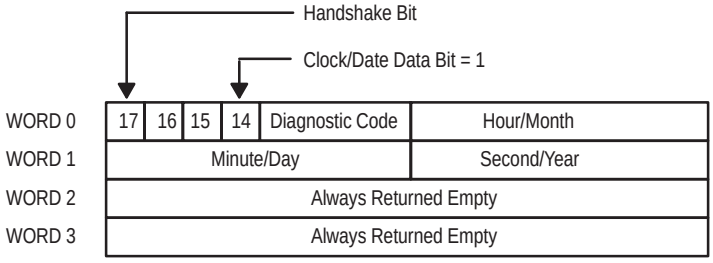

Allen-Bradley Parts

Input Image Table - 3/4 rack

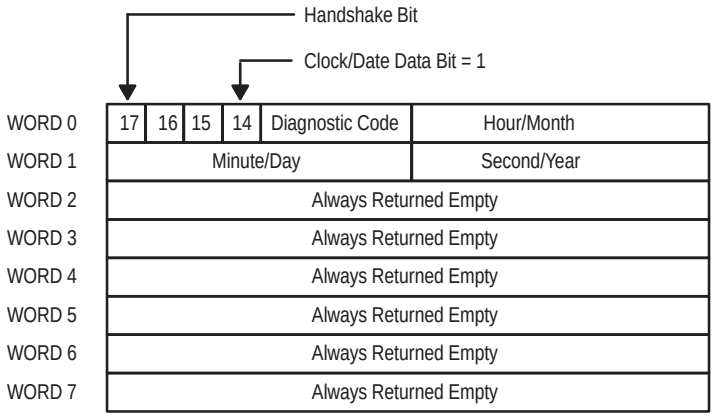

Input Image Table - Full rack

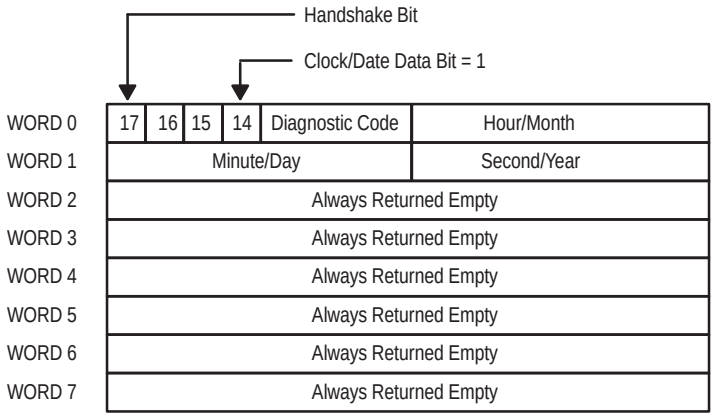

Block Transfer

NOTE: If Block Transfer DIP Switch (Switch 2–4) is enabled, all functions between the PLC and DL40 must be made by Block Transfer.

Important: The block transfer must be configured as non–continuous using ladder logic consistent with the following:

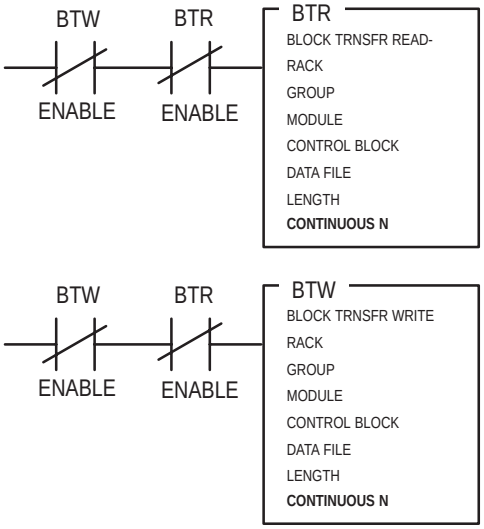

NOTE: The Block Transfer Read instruction is required if DL40 data is to be returned to the PLC or if the Handshake Enable DIP switch is in the ON position.

Triggering a Message (Block Transfer Write)

- Message/Variable/Slave Run Mode – Block Transfer Write Length can be 3 to 13 words. If Length is set to 0, a default length of 13 will be used. The DL40 always interprets the last word as a slave address. If more than 13 words are sent, the DL40 will interpret the thirteenth word as a slave address and ignore the rest.

  Note: Word 13 = 0 tells the DL40 to use the slave address selected as a message attribute.

- Message/Variable Run Mode – Block Transfer Write Length can be 2 to 12 words. If Length is set to 0, a default length of 12 will be used. If more than 12 words are sent, the DL40 accepts the first 12 words and ignores the rest.

Allen-Bradley Parts

Block Transfer Write
File Any size rack

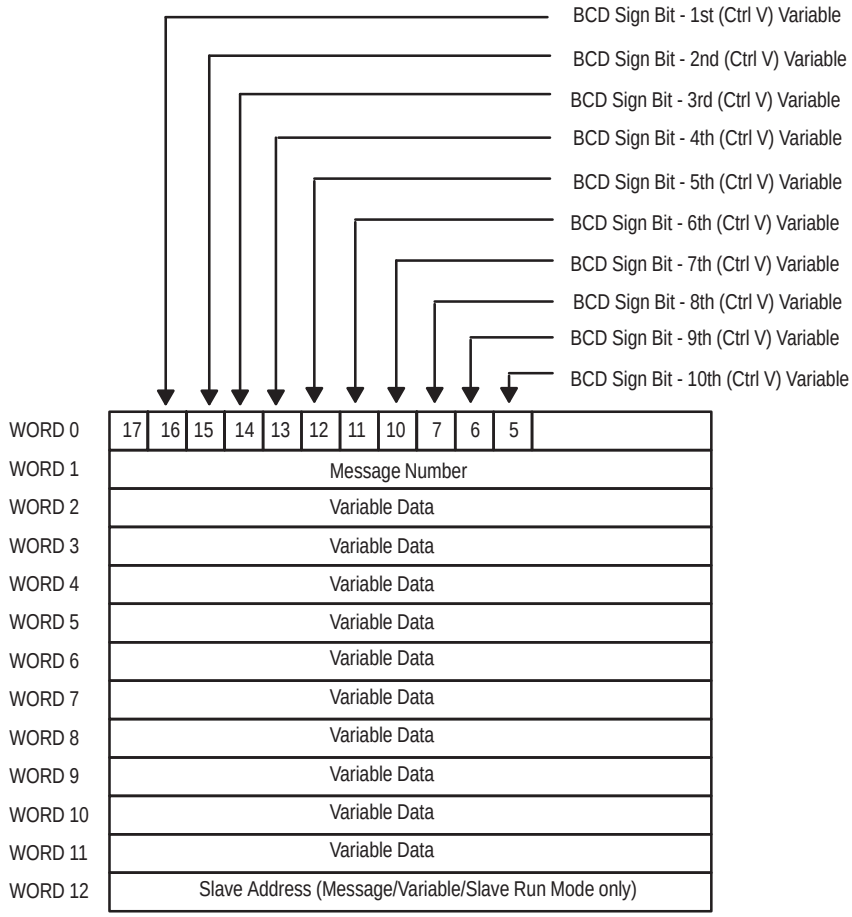

Return Message Number and ASCII Data for Message Being Displayed to PLC (Block Transfer Read)

Note: If Block Transfer Read Length is set to 0 in the PLC program, the DL40 will return 12 words.

Block Transfer Read
File
Any rack size

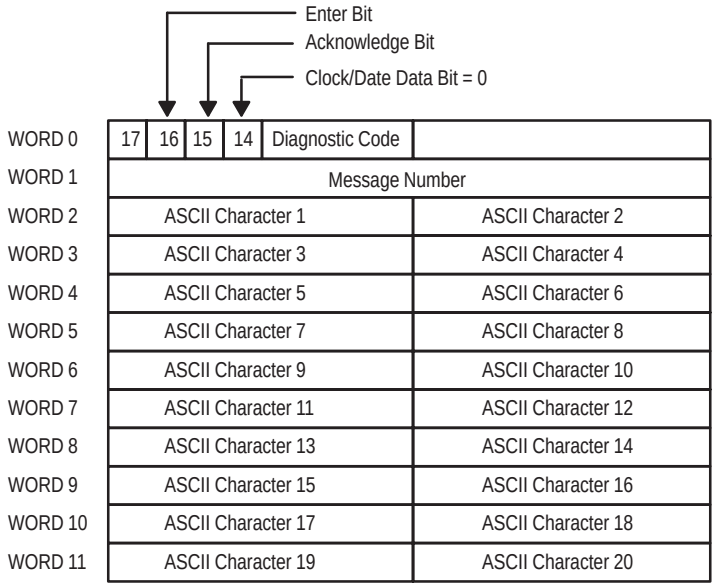

Return Clock or Date Data to PLC (Block Transfer Read)

Note: If Block Transfer Read Length is set to 0 in the PLC program, the DL40 will return 2 words.

Block Transfer Read
File
Any size rack

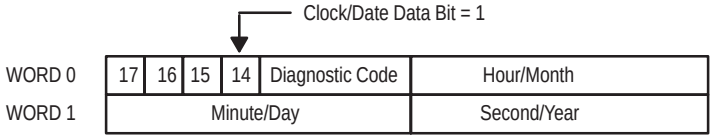

Allen-Bradley Parts

Message List Run Mode

In this mode, messages are continually being displayed by the DL40. There is no need to trigger a message which is already in the list. Messages can, however, be dynamically added to or deleted from the Message List. In addition *Priority Message Numbers* can be sent.

Discrete I/O

Adding or Deleting Messages and/or Triggering a Priority Message

Output Image Table

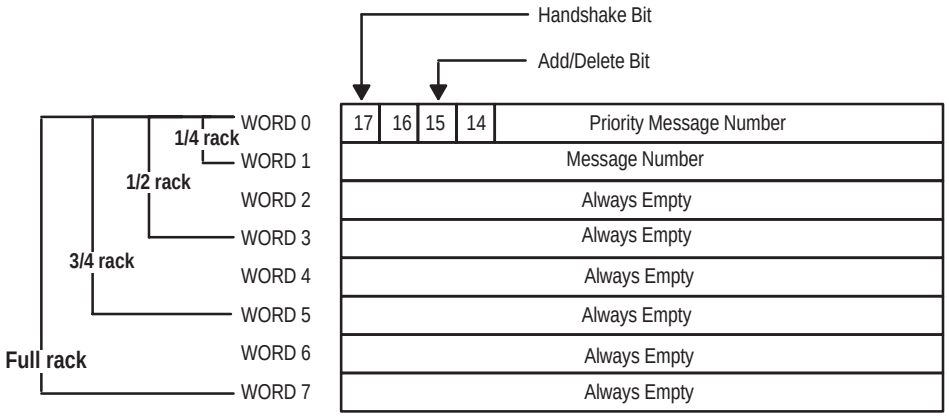

Messages can be added or deleted while Priority Messages are being triggered. If you want to trigger a Priority Message but do not want to change the Message List, you must set Message Number (in word 1) to 0.

Return Message Number and ASCII Data for Message Being Displayed and Length of Message List to PLC

Input Image Table

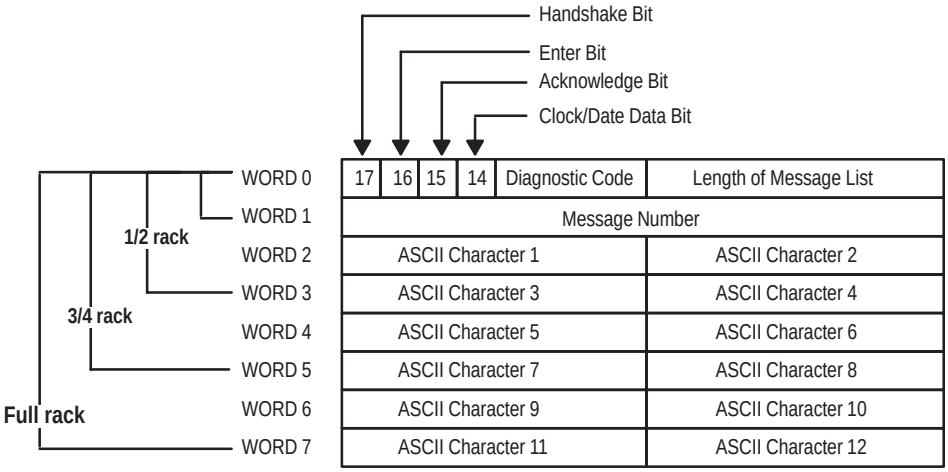

Return Clock or Date Data to PLC

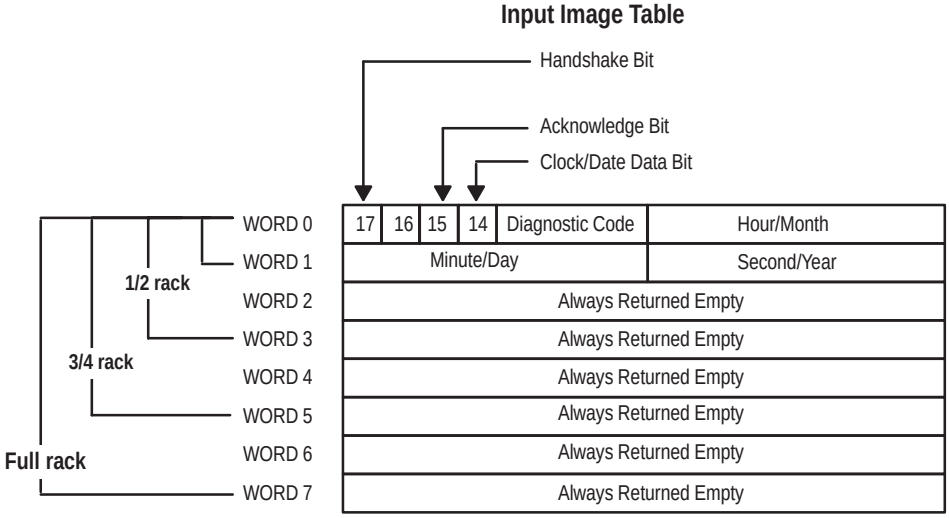

Block Transfer

Note: If Block Transfer DIP Switch (Switch 2–4) is enabled, all functions between the PLC and DL40 must be made by Block Transfer.

Important: The block transfer must be configured as non–continuous using ladder logic consistent with the following:

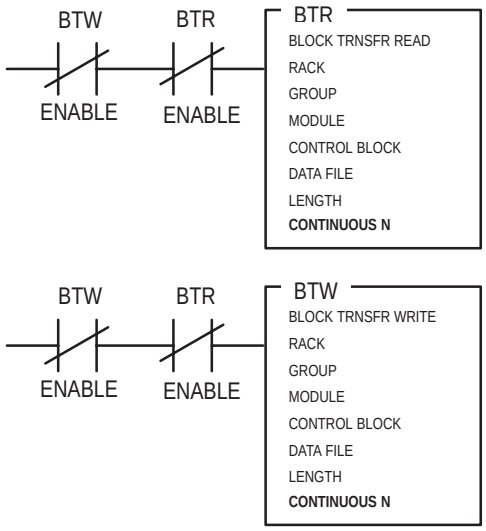

Allen-Bradley Parts

Adding or Deleting Messages and/or Triggering a Priority Message (Block Transfer Write)

Note: If Block Transfer Write Length is set to 0 in your PLC program, a default length of 2 will be used.

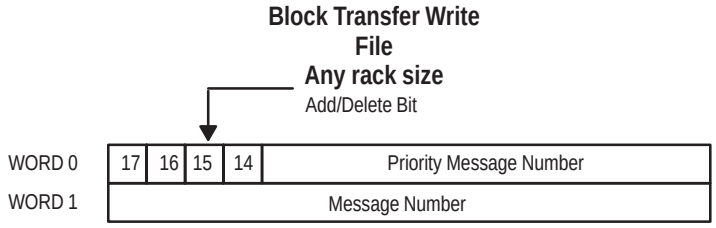

Messages can be added or deleted while Priority Messages are being triggered. If you want to trigger a Priority Message but do not want to change the Message List, you must set Message Number (in word 1) to 0.

Return Message Number and ASCII Data for Message Being Displayed and Length of Message List to PLC (Block Transfer Read)

Note: If Block Transfer Read Length is set to 0 in the PLC program, the DL40 will return 12 words.

Block Transfer Read File
Any rack size-2 to 12 Words

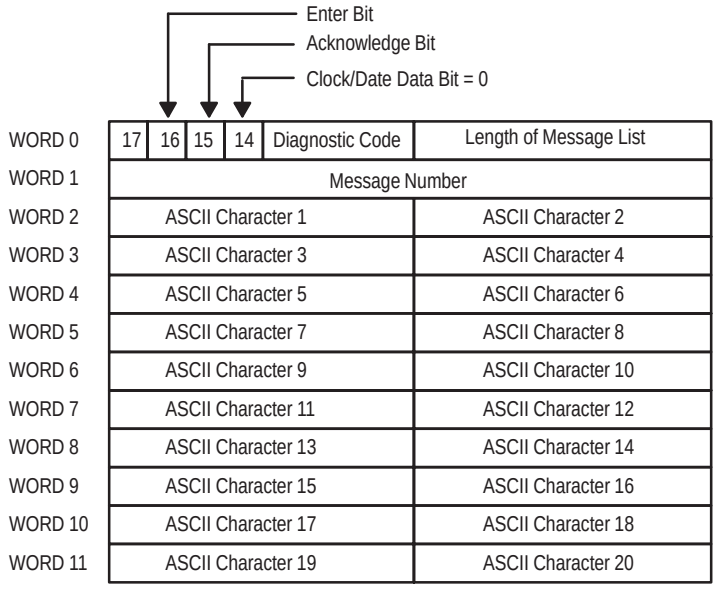

WORD 0	17	16	15	14	Diagnostic Code	Length of Message List
WORD 1	Message Number					
WORD 2	ASCII Character 1					ASCII Character 2
WORD 3	ASCII Character 3					ASCII Character 4
WORD 4	ASCII Character 5					ASCII Character 6
WORD 5	ASCII Character 7					ASCII Character 8
WORD 6	ASCII Character 9					ASCII Character 10
WORD 7	ASCII Character 11					ASCII Character 12
WORD 8	ASCII Character 13					ASCII Character 14
WORD 9	ASCII Character 15					ASCII Character 16
WORD 10	ASCII Character 17					ASCII Character 18
WORD 11	ASCII Character 19					ASCII Character 20

Return Clock or Date Data to PLC (Block Transfer Read)

Note: If Block Transfer Read Length is set to 0 in the PLC program, the DL40 will return 2 words.

Block Transfer Read
File
Any Size Rack

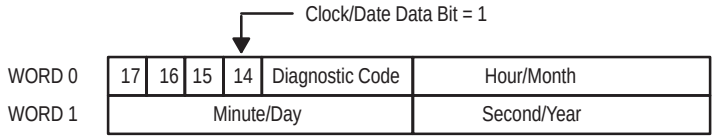

Note: When sending Clock Data to a PLC from the DL40, the Acknowledge Bit will *never* change state (go to 1) even if MSG ACK is set for that message.

Bit Trigger Run Mode

In the Bit Trigger Run Mode, each bit in the Bit Trigger Table that is set will trigger a message. The position of a bit in the table corresponds to the Message Number. Bit 0 (LSB) of word 1 corresponds to message number 1; bit 1 in word 1 corresponds to message number 2.

The Bit Trigger Table has 2 sections, the Priority Section and the Round Robin Section.

Note: With $^1/_4$ rack, Bit Trigger Table must be either priority section or round robin section. The length (in words) of the Priority Section is set in the Programming Software. The length of the Round Robin Section is what is left over (total table length minus the Priority Section length minus 1.) With Discrete I/O, the length of the table is 1, 3, 5, or 7 words long depending on rack configuration ($^1/_4$, $^1/_2$, $^3/_4$, full). With 16 bits per word, the maximum number of messages that can be triggered with discrete I/O is 112 (total for priority and/or round robin messages). The total length of the Bit Trigger Table for Block Transfer is 32 words. With 16 bits per word, the maximum number of messages that can be triggered is 496. Both sections are in whole words.

In addition, *Priority Message Numbers* can be sent.

Allen-Bradley Parts

Discrete I/O

Triggering Messages

Output Image Table

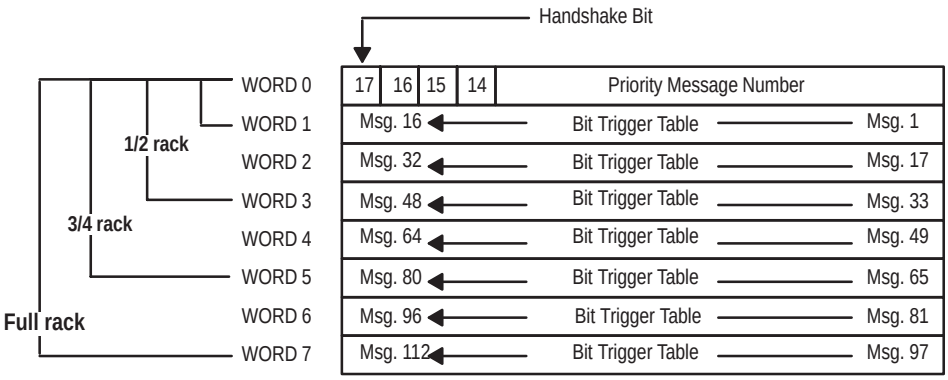

Return Message Number for Message Being Displayed to PLC

Input Image Table

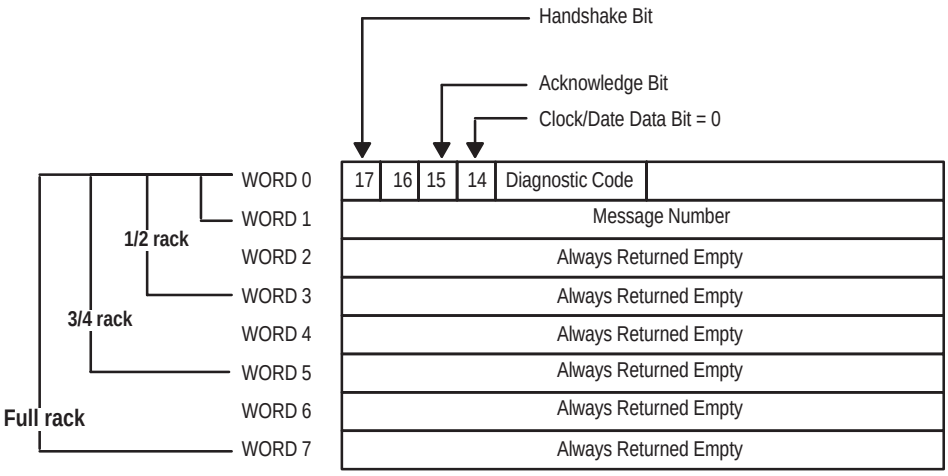

Return Clock or Date Data to PLC

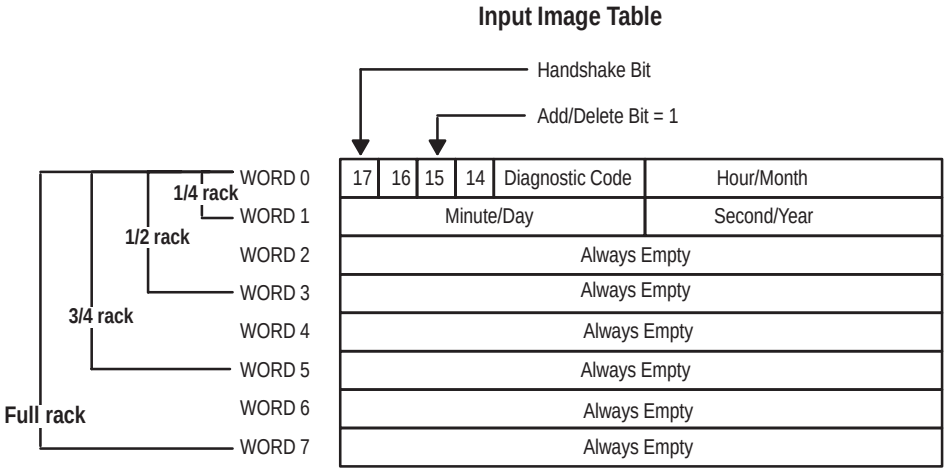

Block Transfer

Note: If Block Transfer DIP Switch (Switch 2-4) is enabled, all functions between the PLC and DL40 must be made by Block Transfer.

Important: The Block Transfer must be configured as non-continuous using ladder logic consistent with the following:

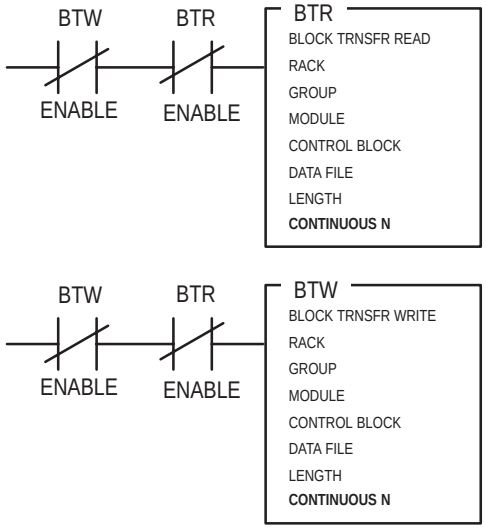

Triggering a Message (Block Transfer Write)

Note: If Block Transfer Write Length is set to 0 in the PLC program, a default length of 32 will be used.

Allen-Bradley Parts

Block Transfer Write File

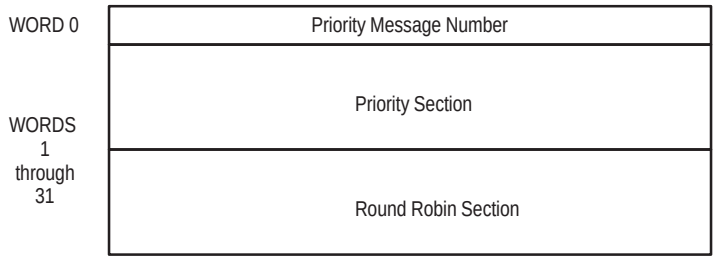

Return Message Number for Message Being Displayed to PLC (Block Transfer Read)

Note: If Block Transfer Read Length is set to 0 in the PLC program, the DL40 will return 2 words.

Block Transfer Read File

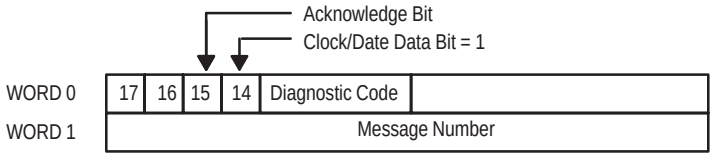

Return Clock or Date Data to PLC (Block Transfer Read)

Note: If Block Transfer Read Length is set to 0 in the PLC program, the DL40 will return 2 words.

Block Transfer Read File

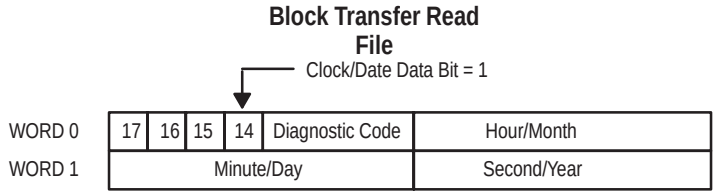

The Handshake Bit

The Handshake Bit provides an indication to the sender (either the DL40 or the PLC) that the Image Table (either Output or Input) was received by the receiver.

For complex system configurations, there could be too little time to insure that data is received by the PLC. In this case, the Handshake feature can be selected to insure that data is not lost. When activated, the Handshake feature holds data until the DL40 receives acknowledgment from the PLC that it has received the data.

To accomplish this, the Handshake feature uses an input and output bit in the PLCs I/O Image Tables. The DL40 will automatically toggle the input Handshake Bit to its opposite state (0 to 1 or 1 to 0).

To select the Handshake feature, enable (set ON) Switch 7 of DIP Switch Bank # 2.

You should consider using the Handshake feature when:

- a large number of Remote I/O devices are involved in an application,
- a large number of block transfers are in your PLC program,
- the PLC application is large,
- the PLCs updates to discrete I/Os may increase the program scan time.
- ASCII data is to be input using block transfers.

Important: To use the Handshake feature with discrete transfers, the PLC program must have a rung that accepts the handshake bit and allows communications to continue. If you have selected the Handshake feature, the PLC program **must** contain this rung or the DL40 will not operate properly. If the DL40 does not detect the handshake for one minute, it will display the following message:

```
NO PLC HANDSHAKE
```

Figure 10.8
Ladder Logic Discrete Handshake and Block Transfer Handshake Rungs

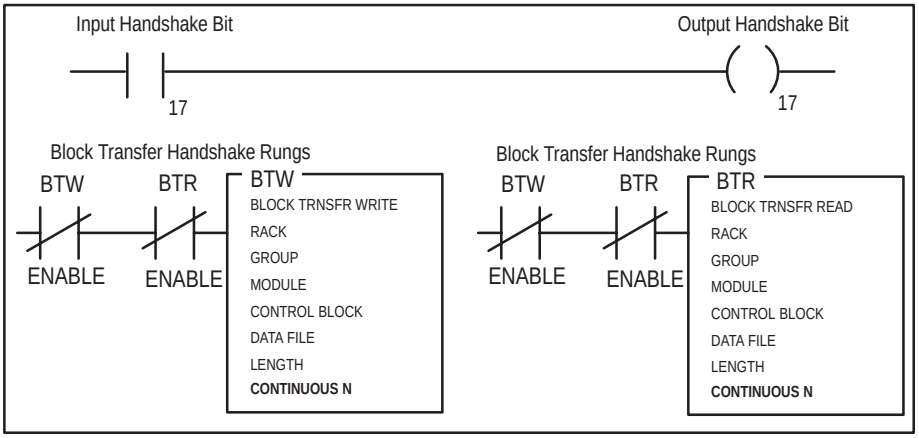

Allen-Bradley Parts

Chapter 11

Installation and Wiring

Chapter Objectives

In this chapter you will learn how to:

- Mount the DL40 in a panel
- Wire the DL40 to your control system

Mounting the DL40

The following figures provide panel cutout dimensions and overall dimensions for the DL40.

You can mount the DL40 in a custom panel or enclosure. When the DL40 is properly installed, the faceplate of the DL40 provides a NEMA Type 12, 13, and 4X (indoor) enclosure integrity.

To install the DL40, perform the following steps:

1. Cut and drill the appropriate mounting holes in the enclosure or panel.
2. Remove the six mounting nuts from the six mounting studs on the DL40.
3. Position the DL40 in the panel or enclosure mounting hole.
4. Install and tighten the six mounting nuts to a torque of 14 in•lbs (1.6N•m) each.

Figure 11.1
Panel Cutout Dimensions for Two-Line DL40

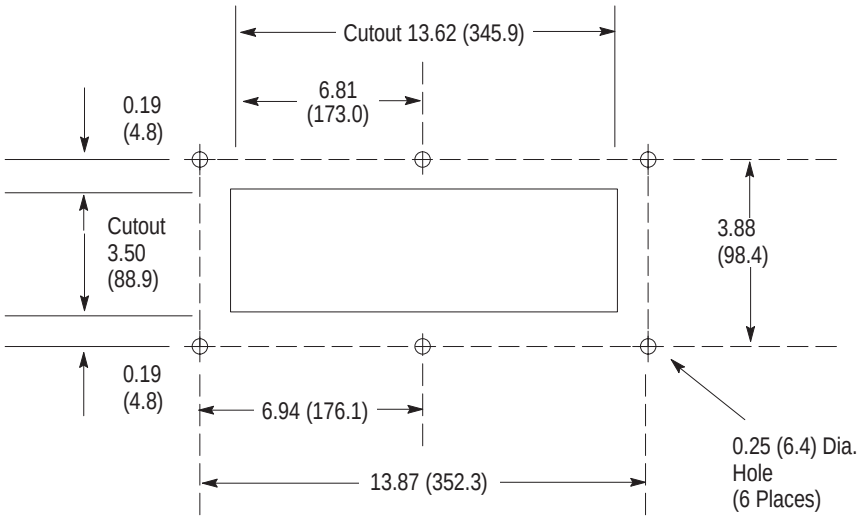

Figure 11.2
Panel Cutout Dimensions for Four Line DL40

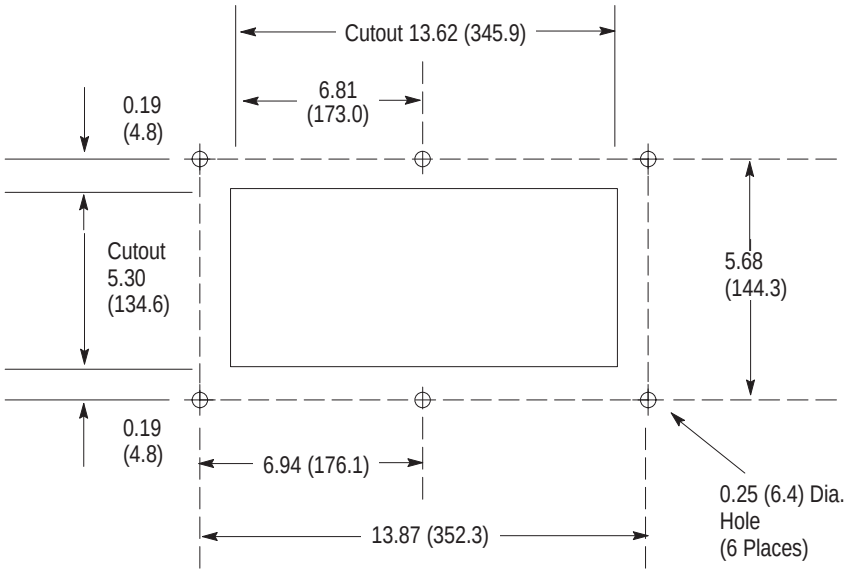

NOTE: All dimensions expressed in inches. Metric dimensions (in millimeters) appear in parentheses.

Allen-Bradley Parts

Figure 11.3
Two Line DL40 Overall Dimensions

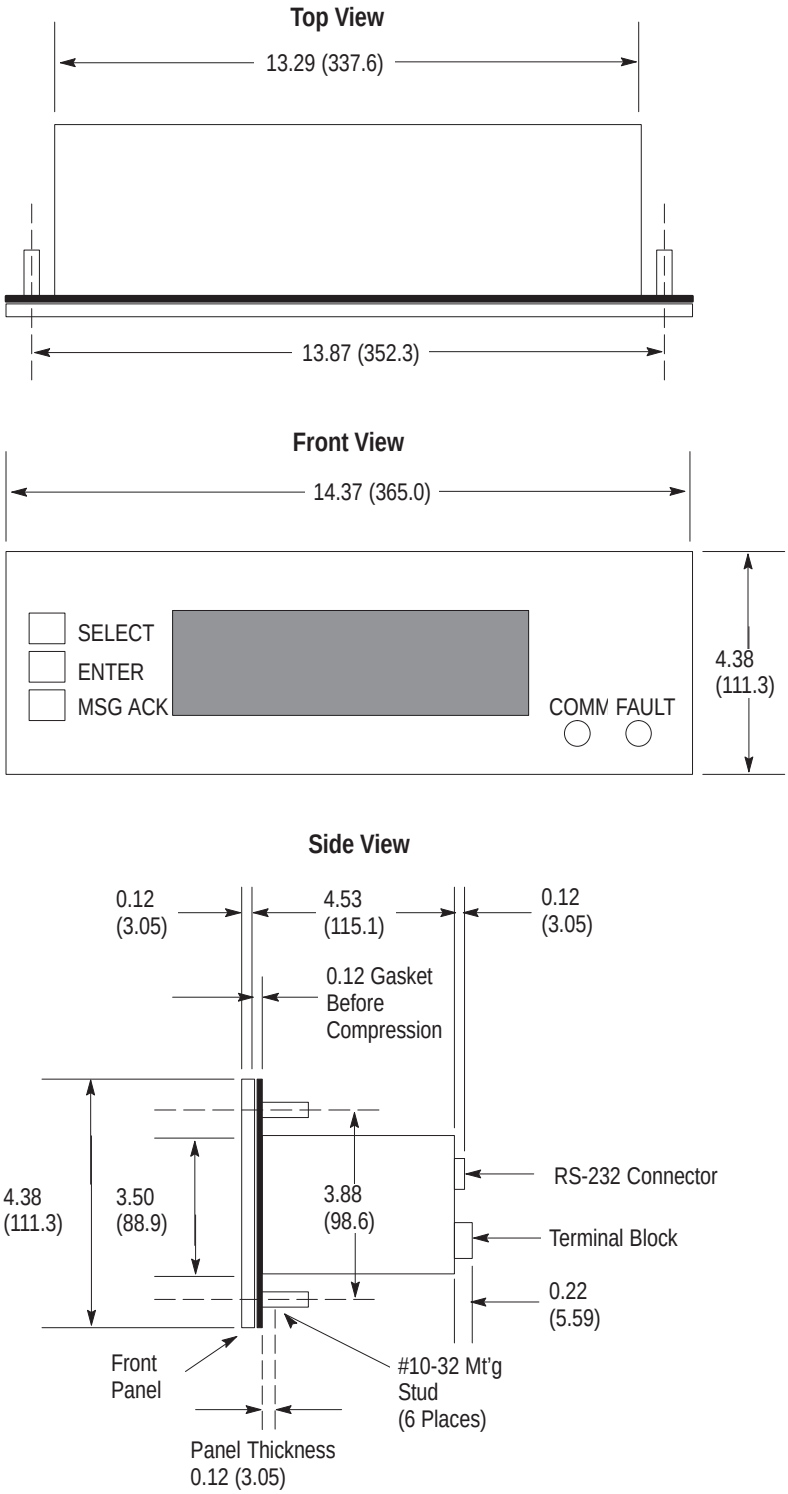

NOTE: All dimensions expressed in inches. Metric dimensions (in millimeters) appear in parentheses.

Figure 11.4
Four Line DL40 Overall Dimensions

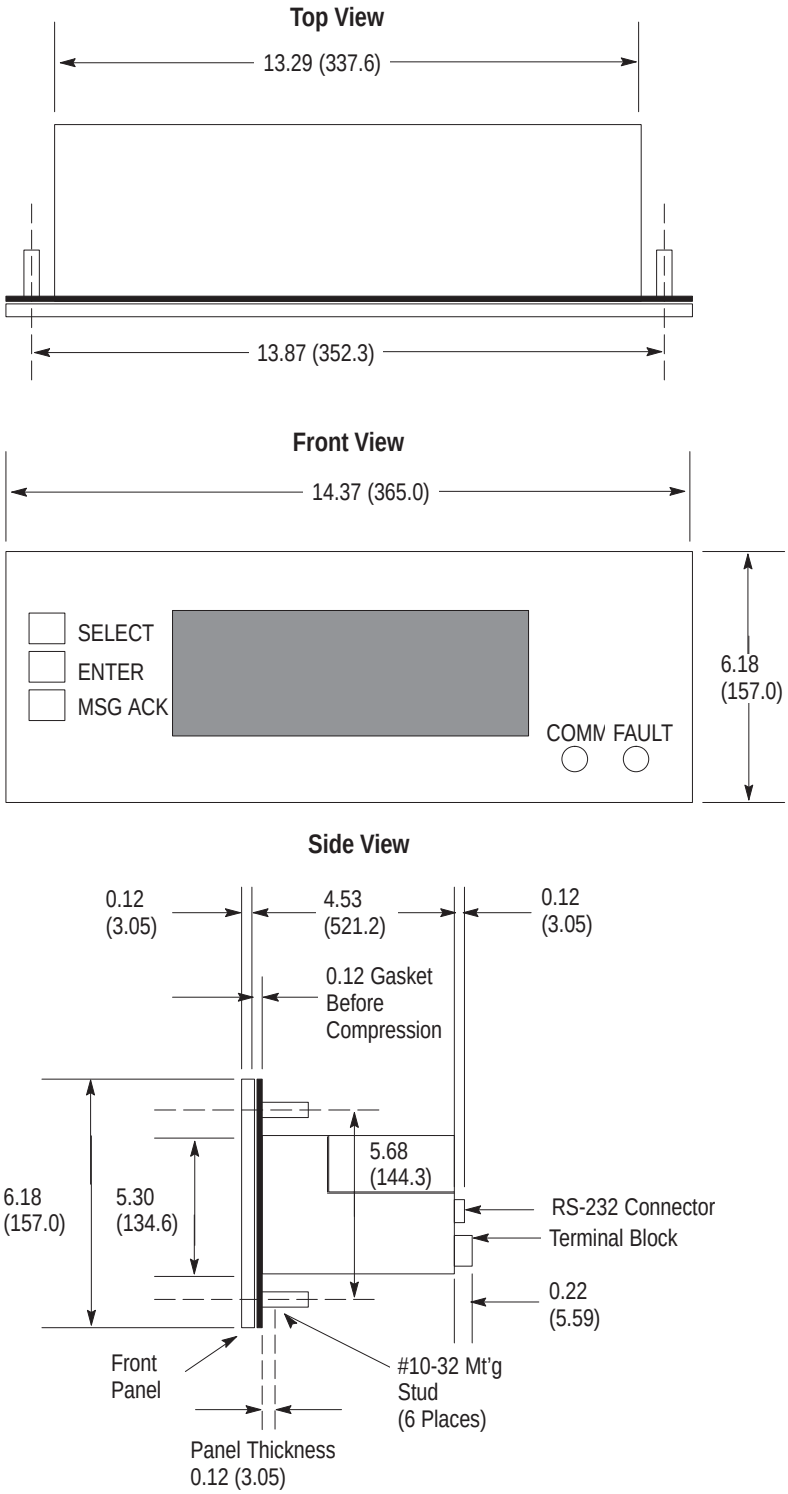

NOTE: All dimensions expressed in inches. Metric dimensions (in millimeters) appear in parentheses.

Allen-Bradley Parts

Electrical Precautions

Install the DL40 Message Display using Publication NFPA 70E, Electrical Safety Requirements for Employee Workplaces. In addition to the NFPA general guidelines, we have added some specific guidelines.

Careful cable routing helps minimize electrical noise. Route incoming power to the module by a separate path from the communication cables.

Do not run communications wiring and power wiring in the same conduit!

Where wire paths must cross, make their intersection perpendicular.

With solid state systems, grounding helps limit the effects of noise due to electromagnetic interference (EMI). To avoid problems caused by EMI, use shielded cables.

To avoid problems caused by electrostatic discharge (ESD), ground the chassis using the Chassis Ground at the rear of the DL40. See Figure 11.5 and Figure 11.6

Note: A jumper between Earth Ground and Chassis Ground is installed at the factory. It can be removed to meet your requirements. See Figure 11.15.

Input Voltage Requirements

Before connecting the Dataliner DL40 Message Display to the incoming power, verify that the power source and display type are in agreement.

The DL40 Message Display will operate from 85–265 Volts AC, 47–63 Hz.

Wiring the DL40

After the DL40 has been mounted you can connect the necessary wiring. Figure 11.5 and Figure 11.6 illustrate the back of the DL40. Two versions of the DL40 are shown: Remote I/O and Parallel Port.

The drawing of the Remote I/O version shows the location of the Remote I/O Connector and the Rack Number DIP switch. The drawing of the Parallel Port version shows the location of the Parallel Port (data lines, strobe lines, and +12 volt power supply). Both the Remote I/O and the Parallel Port versions show the location of the RS–485 port, Remote Reset, Alarm Relay terminals, Keyboard port, RS–232 port, and the power connector, as well as the options DIP switch and Serial Address DIP switch.

Figure 11.5
Rear View of Remote I/O Version of the DL40 (4-line version shown)

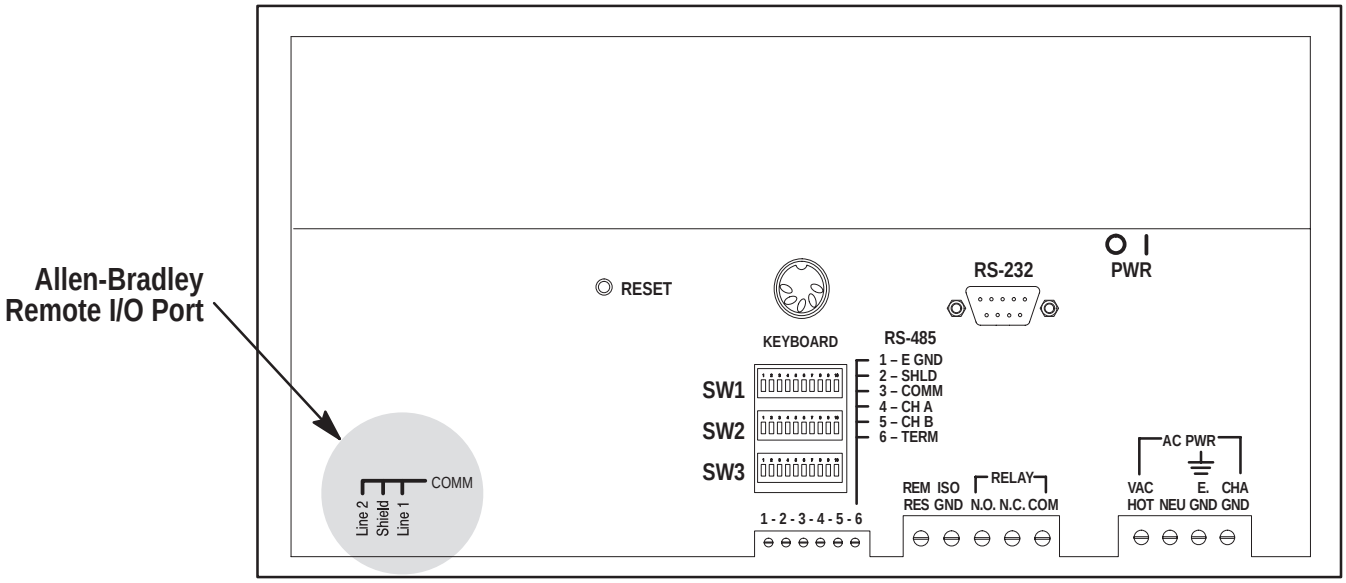

Figure 11.6
Rear View of Parallel Port Version of the DL40 (4-line version shown)

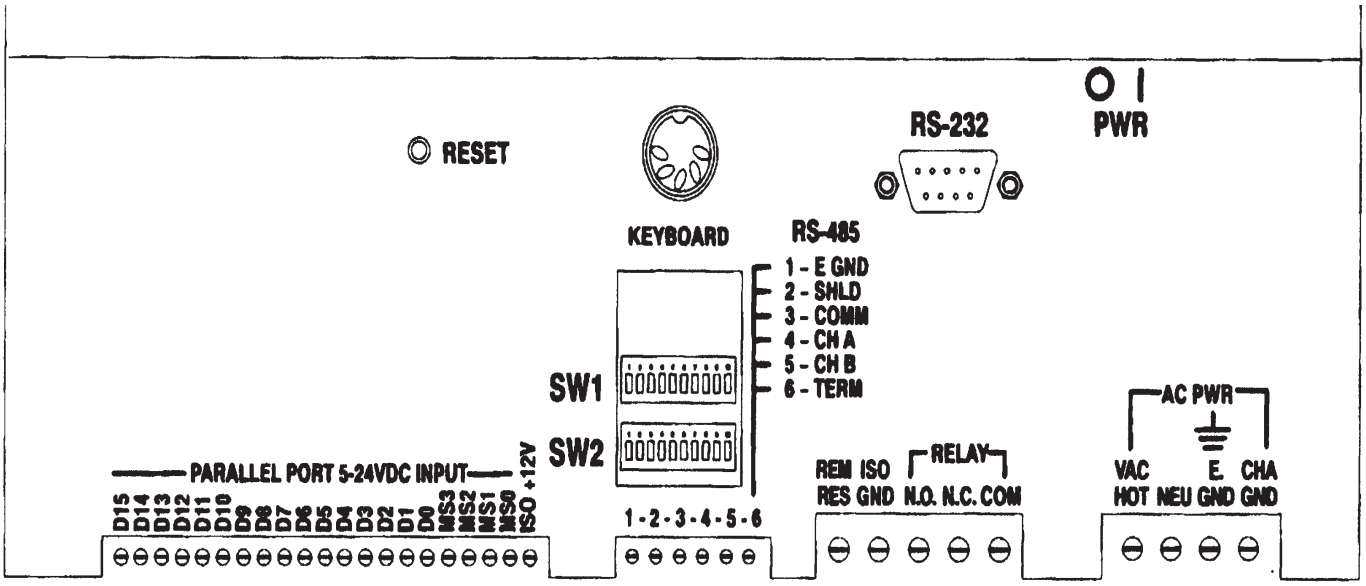

The Remote I/O Connector

The remote I/O connector at the back of the DL40 connects the DL40 to the host PLC via the remote I/O link (Catalog No. 1746-RT29).

The remote I/O link begins at the scanner module. The scanner modules and programmable controllers impose physical and logical limitations on the link. You must know these limitations to avoid exceeding them.

Allen-Bradley Parts

To the rest of the system, the DL40 looks like a Remote I/O rack, and is addressed as such.

The maximum cable length (link distance) is limited by the baud rate selected for the system:

10,000 feet (2,800m) for 57.6K baud
5,000 feet (1,400m) for 115.2K baud
2,500 feet (700m) for 230.4K baud

The actual connection to the Link is through a Catalog Number 1770–CD Serial Data Link cable which wires to a connector plug for the DL40.

Note: Use 150Ω, $^1/_2$W. resistors to terminate links operating at 57.6 or 115.2K baud; use 82Ω, $^1/_2$W. resistors to terminate links operating at 230.4K baud.

Connecting to a Scanner Module

Connect the DL40 to the scanner module with Allen–Bradley I/O cable, Catalog Number 1770–CD (Belden 9463).

Refer to *Programmable Controller Wiring and Grounding Guidelines* (Publication 1770–4.1) for detailed grounding and wiring guidelines. The User Manual or Product Data Sheet for your scanner module will also provide cabling information.

Important: When first installed, the DL40 may misinterpret the hardware configuration if the DIP switch settings are not correct. If the FAULT indicator flashes after installation, verify the DIP switch settings and recycle power to clear the fault.

A connector plug is provided with each DL40. Wire the connector to the I/O cable according to Figure 11.7.

Figure 11.7
The Remote I/O Connector (Catalog No. 1746-RT29)

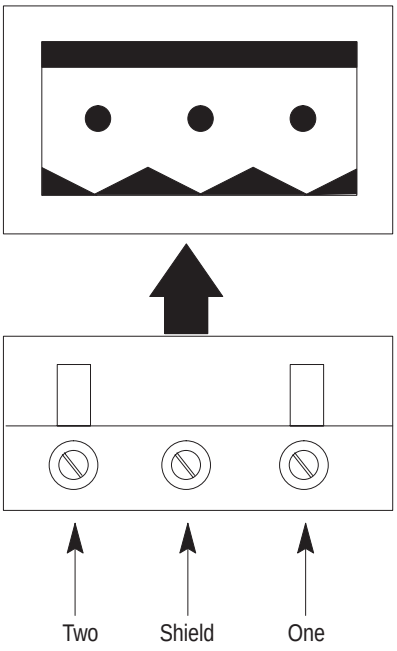

The Parallel Port

The Parallel Port terminal block at the back of the DL40 connects 20 parallel input lines from the DL40 to the host PLC. Four strobe lines (MS0 – MS3) indicate the type of data that is at the parallel port. The sixteen data lines (D0 through D15) provide the DL40 with its data input. The 12 volt power supply provides a positive supply to drive up to 20 external DC Outputs. For more information see Chapter 9.

Figure 11.8
The Parallel Port

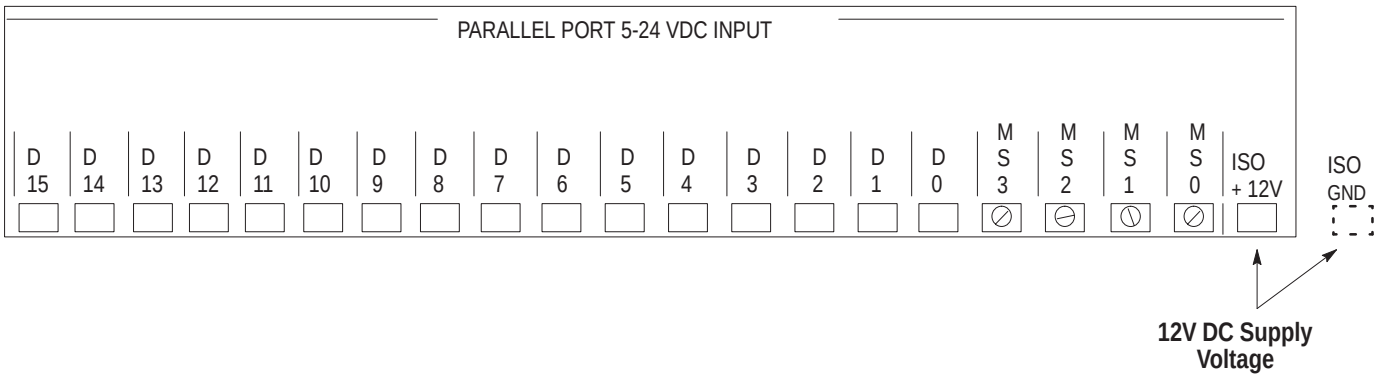

Allen-Bradley Parts

The RS-485 Port Set to Open Protocol

The RS–485 port connects one or multiple DL40s to a computer for uploading and downloading application files, to trigger messages, and to connect one or multiple slave displays to the DL40. For additional information see Chapter 8, *Serial Communications*.

Figure 11.9
The RS-845 Port

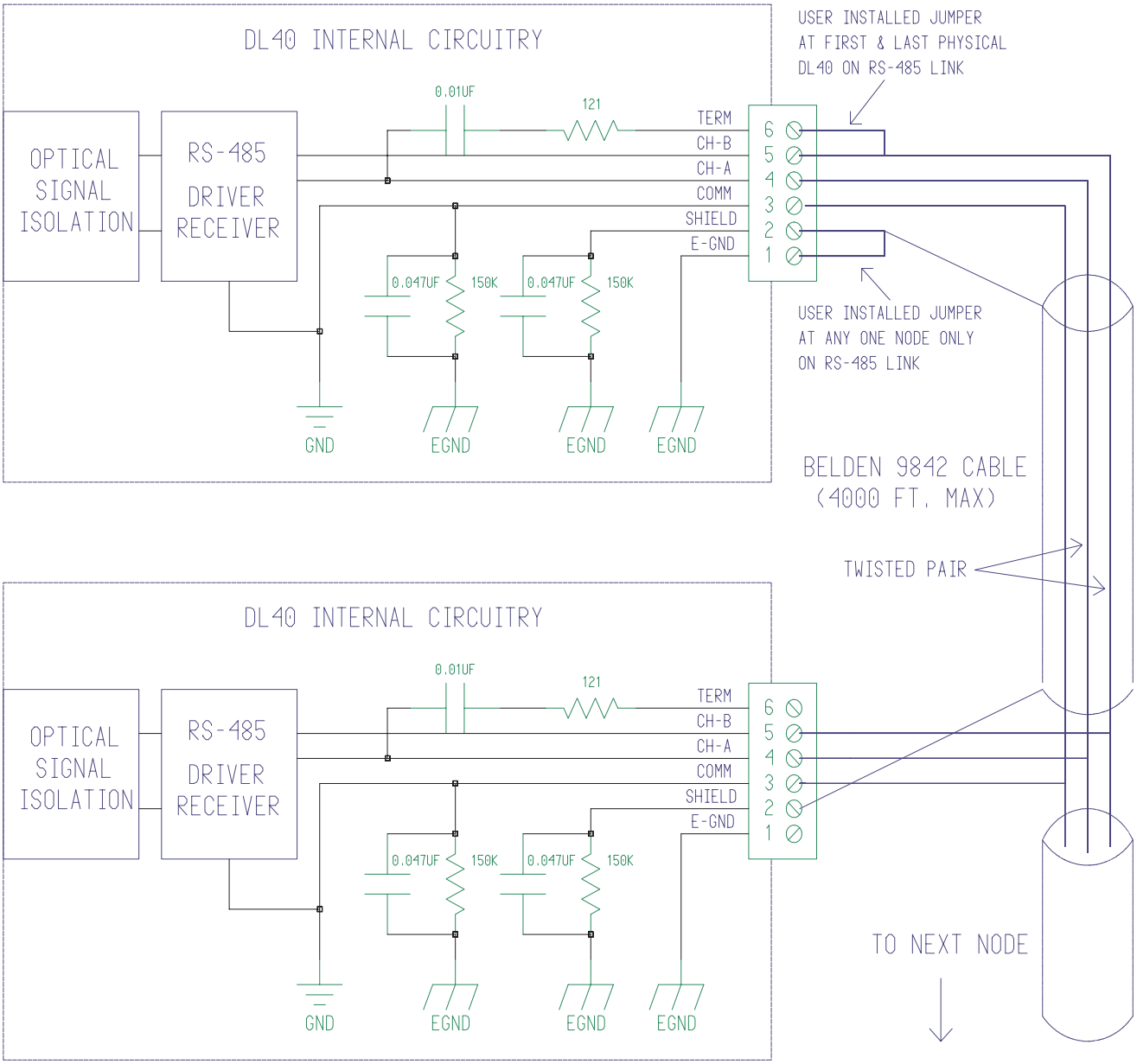

RS-485 Port Set to Programmer

When a personal computer is used to upload or download application memory to or from the DL40's RS–485 port, a Black Box RS–485 converter, Model LD-485A-MP should be used. The link from the personal computer to the converter is an RS–232 link. The following cable is recommended:

- for an AT style computer, use an Allen–Bradley 2706-NC 15.
- for an XT style computer, see Appendix C.

Connect from the converter to the DL40 as shown in Figure 11.10. The converter should be configured as follows:

1. Remove cover and set the converter as a DCE device using the XWlA jumper. This is a DIP shunt jumper.
2. Short TXA and RXA on TB1 of the converter. This should be connected to J6, pin 5 of the DL40.
3. Short TXB and RXB on TB1 of the converter. This should be connected to J6, pin 4 of the DL40.
4. Set switch W8 on the converter for full-duplex operation when downloading or triggering messages via the RS–485 Port.
5. Set the RTS/CTS delay time to 5 milliseconds using jumper W9.
6. Set switch S2 to *Unterminated* position.
7. Replace cover.
8. Set *Normal/Loopback* switch on front cover to *Normal*.

Figure 11.10
Wiring the RS–485 Port when Port Use is Set to *Programmer*

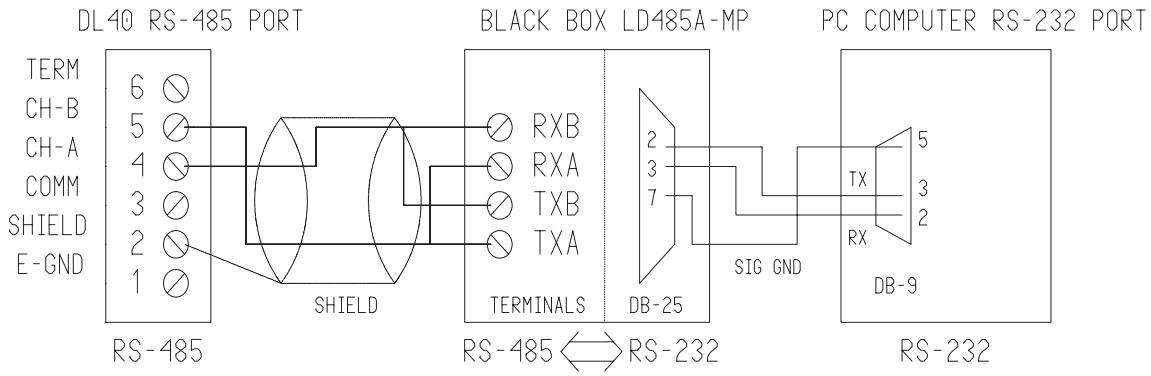

Allen-Bradley Parts

RS-485 Port Set to DL Slaves

If the RS–485 Port is configured to send messages to slaves, wire the port as shown in the figure below.

Figure 11.11
Wiring the RS–485 Port when Port Use is Set to *DL Slaves*

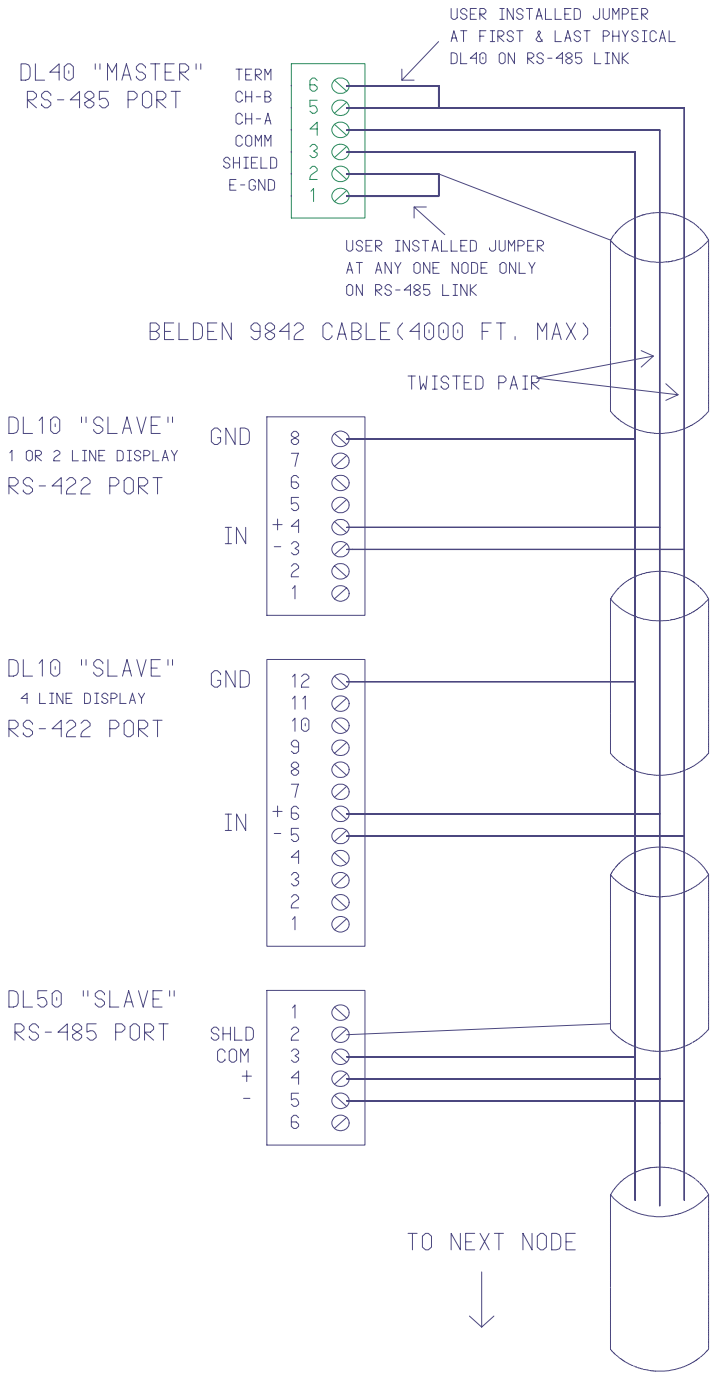

The RS-232 Port

The RS–232 Port connects the DL40 to a computer for direct (point to point) uploading and downloading of application files, as well as testing messages. It also connects the DL40 to a tape recorder for reading or writing the DL40's internal application memory to or from the tape recorder or connects the DL40 to a serial printer.

Catalog Numbers for Allen–Bradley cables are listed on page 2–10.

If you want to construct your own cable, use the appropriate diagram in Appendix C.

The Alarm Relay

A DL40 can be used to trigger a remote alarm or warning light under specific conditions. You would attach this remote alarm or light to the Alarm Relay.

ATTENTION: Use the Alarm Relay for annunciator purposes only. Do not use it for control.

Figure 11.12
Relay Port

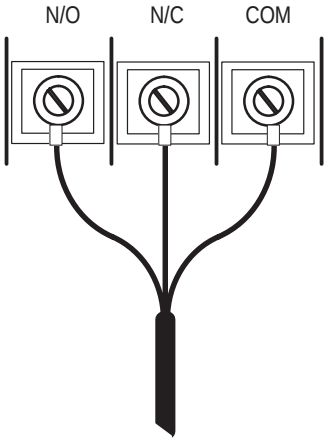

Allen-Bradley Parts

The Remote Reset

The DL40 can be reset from a remote location. In order to reset the DL40 from a remote location you would attach a normally open (N.O.) reset button to the remote reset (REM RES).

Figure 11.13
The Remote Reset

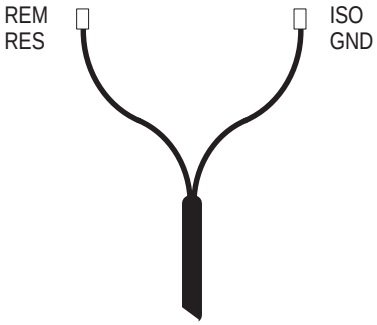

Keyboard Port

An IBM–AT, –XT or compatible keyboard can be attached to the 8–Pin DIN connector on the back of the DL40. The keyboard can be used to trigger messages, as well as access of the following functions: PRINTER, HISTORICAL EVENTS STACK, BACKUPS, CLOCK SET and DEBUG. In addition, the keyboard is used to send ASCII data back to the PLC.

Note: The keyboard DIP switch setting must be set to the same setting as the keyboard type being used.

Figure 11.14
Keyboard Port

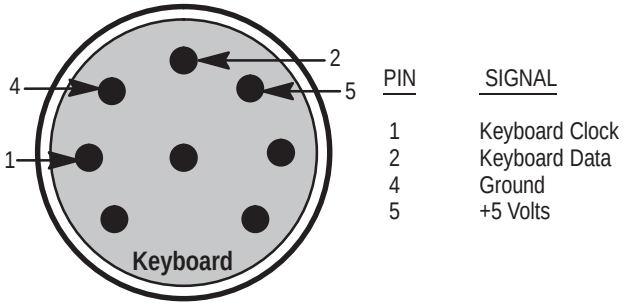

PIN	SIGNAL
1	Keyboard Clock
2	Keyboard Data
4	Ground
5	+5 Volts

The AC Power Connector

Note: Before connecting the power cable of the DL40, make sure DL40's power switch is in the OFF position. This switch is on top panel of the DL40.

The DL40 requires 85–265V AC, 47–63 Hz.

ATTENTION: Incorrect power wire connection can cause damage to the DL40.

Figure 11.15
The Power Connector

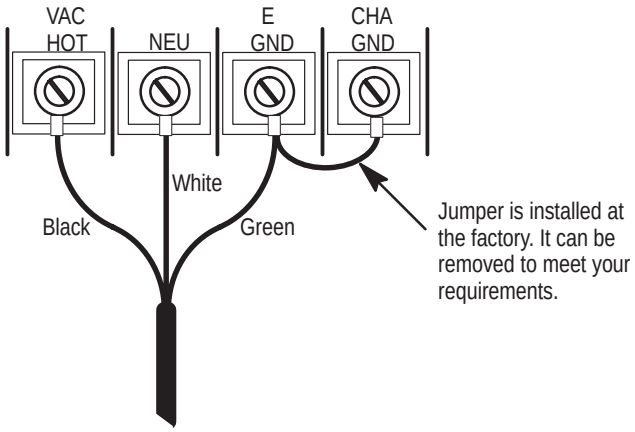

Note: Make certain all DIP switch settings are in the correct position before the DL40 is powered up. See Chapter 12 for the correct DIP switch settings.

Allen-Bradley Parts

Chapter 12

DIP Switch Settings

Chapter Objections

This chapter gives DIP switch settings for Remote I/O and Parallel Port units.

Remote I/O Units

Three DIP switch banks are located on the back of the module. You can access the DIP switches through a cutout, as shown below.

Figure 12.1
DIP Switch Locations

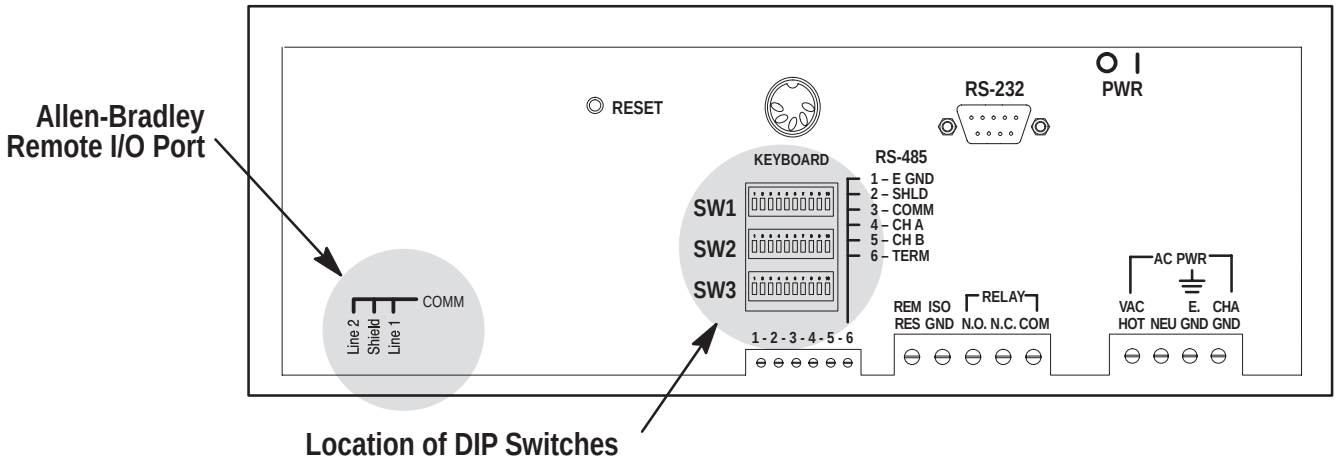

Switch Bank #1 (SW–1) sets the rack address.

Switch Bank #2 (SW–2) controls: Baud rate, Fast Reset Sequence, Block Transfer, Last Chassis, Keyboard Type, Handshaking, Last State, Select Enable.

Switch Bank #3 (SW–3) sets the serial address. The serial address refers to the address used for triggers received from the serial RS–485 port or computer keyboard.

Important: Remove power from the DL40 before setting any switch except Select Enable, SW2–9. Select Enable can be switched with power on. Switch settings are scanned **only** on power–up. The new setting for Select Enable takes effect immediately. The new settings for all other switches take effect when you power–up or reset the DL40.

Setting Switch Bank #1

Presented in Table 12.A through Table 12.C are functions and settings for Switch Bank #1 for the PLC-2 family. Rack address settings for PLC-3 and PLC-5 are listed in Table 12.D.

Note: the rack address settings apply only to PLC-2 or 1771-SN Sub-Scanner.

Note: A DIP switch is ON when in the "up" position.

Table 12.A
Switch Bank #1 when using DL40s with:
– PLC-2 with Remote I/O
– Any 1771–SN Sub-Scanner Application (Remote I/O Units)
–SLC with 1747-SN Block Transfer

Specifying Rack Address of PLC-2						
I/O Rack Address	Switch Settings					
	1	2	3	4	5	6
1	ON	ON	ON	ON	ON	ON
2	ON	ON	ON	ON	ON	OFF
3	ON	ON	ON	ON	OFF	ON
4	ON	ON	ON	ON	OFF	OFF
5	ON	ON	ON	OFF	ON	ON
6	ON	ON	ON	OFF	ON	OFF
7	ON	ON	ON	OFF	OFF	ON

Table 12.B
Specifying First I/O Group

First I/O Group	Switch Settings	
	7	8
0	ON	ON
2	ON	OFF
4	OFF	ON
6	OFF	OFF

Table 12.C
Specifying I/O Rack Size

Rack Size	Switch Settings	
	9	10
1/4	ON	ON
1/2	ON	OFF
3/4	OFF	ON
Full	OFF	OFF

Allen-Bradley Parts

Presented in Table 12.D through Table 12.F are functions and settings for Switch Bank #1 for the PLC-3 and PLC-5 families of controllers.

Table 12.D
Setting Switch Bank #1 for PLC-3 and PLC-5 Family Processors (Remote I/O Units)

I/O Rack Number Switch													
I/O Rack	Switch Selections						I/O Rack	Switch Selections					
Address	1	2	3	4	5	6	Address	1	2	3	4	5	6
01	ON	ON	ON	ON	ON	OFF	41	OFF	ON	ON	ON	ON	OFF
02	ON	ON	ON	ON	OFF	ON	42	OFF	ON	ON	ON	OFF	ON
03	ON	ON	ON	ON	OFF	OFF	43	OFF	ON	ON	ON	OFF	OFF
04	ON	ON	ON	OFF	ON	ON	44	OFF	ON	ON	OFF	ON	ON
05	ON	ON	ON	OFF	ON	OFF	45	OFF	ON	ON	OFF	ON	OFF
06	ON	ON	ON	OFF	OFF	ON	46	OFF	ON	ON	OFF	OFF	ON
07	ON	ON	ON	OFF	OFF	OFF	47	OFF	ON	ON	OFF	OFF	OFF
10	ON	ON	OFF	ON	ON	ON	50	OFF	ON	OFF	ON	ON	ON
11	ON	ON	OFF	ON	ON	OFF	51	OFF	ON	OFF	ON	ON	OFF
12	ON	ON	OFF	ON	OFF	ON	52	OFF	ON	OFF	ON	OFF	ON
13	ON	ON	OFF	ON	OFF	OFF	53	OFF	ON	OFF	ON	OFF	OFF
14	ON	ON	OFF	OFF	ON	ON	54	OFF	ON	OFF	OFF	ON	ON
15	ON	ON	OFF	OFF	ON	OFF	55	OFF	ON	OFF	OFF	ON	OFF
16	ON	ON	OFF	OFF	OFF	ON	56	OFF	ON	OFF	OFF	OFF	ON
17	ON	ON	OFF	OFF	OFF	OFF	57	OFF	ON	OFF	OFF	OFF	OFF
20	ON	OFF	ON	ON	ON	ON	60	OFF	OFF	ON	ON	ON	ON
21	ON	OFF	ON	ON	ON	OFF	61	OFF	OFF	ON	ON	ON	OFF
22	ON	OFF	ON	ON	OFF	ON	62	OFF	OFF	ON	ON	OFF	ON
23	ON	OFF	ON	ON	OFF	OFF	63	OFF	OFF	ON	ON	OFF	OFF
24	ON	OFF	ON	OFF	ON	ON	64	OFF	OFF	ON	OFF	ON	ON
25	ON	OFF	ON	OFF	ON	OFF	65	OFF	OFF	ON	OFF	ON	OFF
26	ON	OFF	ON	OFF	OFF	ON	66	OFF	OFF	ON	OFF	OFF	ON
27	ON	OFF	ON	OFF	OFF	OFF	67	OFF	OFF	ON	OFF	OFF	OFF
30	ON	OFF	OFF	ON	ON	ON	70	OFF	OFF	OFF	ON	ON	ON
31	ON	OFF	OFF	ON	ON	OFF	71	OFF	OFF	OFF	ON	ON	OFF
32	ON	OFF	OFF	ON	OFF	ON	72	OFF	OFF	OFF	ON	OFF	ON
33	ON	OFF	OFF	ON	OFF	OFF	73	OFF	OFF	OFF	ON	OFF	OFF
34	ON	OFF	OFF	OFF	ON	ON	74	OFF	OFF	OFF	OFF	ON	ON
35	ON	OFF	OFF	OFF	ON	OFF	75	OFF	OFF	OFF	OFF	ON	OFF
36	ON	OFF	OFF	OFF	OFF	ON	76	OFF	OFF	OFF	OFF	OFF	ON
37	ON	OFF	OFF	OFF	OFF	OFF							

Table 12.E
Specifying I/O Group (Remote I/O Units)

First I/O Group	Switch Settings	
	7	8
0	ON	ON
2	ON	OFF
4	OFF	ON
6	OFF	OFF

Table 12.F
Specifying I/O Rack Size (Remote I/O Units)

Rack Size	Switch Settings	
	9	10
1/4	ON	ON
1/2	ON	OFF
3/4	OFF	ON
Full	OFF	OFF

Setting Switch Bank #2

Refer to Table 12.G and Table 12.H to identify switch functions and settings for Switch Bank #2.

Table 12.G
Setting Switch Bank #2 on Dataliner DL40 Displays (Remote I/O Units)

Switch	Description	Switch Settings	
		OFF	ON
1	Remote I/O		
2	Baud Select	See Table 12.H	
3	Fast Reset	Disabled	Enabled
4	Block Transfer	Disabled	Enabled
5	Last Chassis	Last	Not Last
6	Keyboard Type	IBM–AT	IBM–XT
7	Handshake	Disabled	Enabled
8	Last State	Disabled	Enabled
9	Select Button	Disabled	Enabled
10	Not Used		

Table 12.H
Setting Switch Bank #2 on Dataliner DL40 Displays (Remote I/O Units)

Baud Rate	Switch Settings	
	1	2
57.6K	ON	ON
115.2K	OFF	ON
230.4K	ON or OFF	OFF

Allen-Bradley Parts

Notes on Switch Settings

Fast Reset Sequence (Switch #3)

If the Fast Reset DIP switch is set to ON, the DL40 will display only the Firmware Version, Screen Test, and the Selected Run Mode. All other prompts will be skipped (but the tests will still be run). If any of the tests fail, then that error message will still appear. If the Fast Reset DIP switch is set to OFF, the DL40 will display the Firmware Version, Memory Verification, External Module Verification, Screen Test, RS-232 Port Settings, RS-485 Port Settings, Remote I/O Settings, and the Selected Run Mode.

Block Transfer Enabled (Switch #4)

If the Block Transfer Enabled DIP switch is set to ON, then block transfer files are used for communication with the PLC. If the Block Transfer Enabled DIP switch is set to OFF, then Discrete I/O is used to communicate with the PLC.

Last Chassis (Switch #5)

The Last Chassis setting tells the PLC if the DL40 is the last device of that logical rack, **not necessarily the last rack of the remote I/O link**.

Keyboard Type (Switch #6)

If the Keyboard Type DIP switch is set to ON, then an IBM-XT or compatible is the only type of keyboard that can be used. If the DIP switch is set to OFF, then the IBM-AT or compatible is the only type of keyboard that can be used.

Handshake Enable (Switch #7)

- **With Block Transfer Enable Switch OFF.** If the Handshake Enabled DIP switch is set to ON this allows the use of the handshake bit. **NOTE:** If HANDSHAKE (switch #7) is enabled, the HANDSHAKE rung must be programmed in the ladder logic. See page 10 – 28.
- **With Block Transfer Enable Switch ON.**
  - Handshake Switch ON – DL40 will indicate *ERROR* if no block transfer reads are requested for one minute.
  - Handshake Switch OFF – DL40 will not generate error message if no block transfer reads are requested. Messages will continue to run.

Last State (Switch #8)

If the Last State DIP switch is set to ON, then the DL40 will have the following behavior in the event that communication is lost.

If communication is lost when LAST STATE is enabled, the DL40 will alternate the error message with the current display. The DL40 will still run messages triggered via the keyboard or the RS-485 port.

If LAST STATE is disabled, the DL40 will clear the display, and display the error message.

Select Button Enable (Switch #9)

If the Select Button Enable DIP switch is set to ON, then the [SELECT] button on the faceplate of the DL40 is enabled. If the Select Button Enable DIP switch is set to OFF, then the [SELECT] button on the faceplate of the DL40 is disabled.

Setting Switch Bank #3

Use Switch Bank #3 to set the serial address. The serial address refers to the address used for triggers received from the serial RS-485 port or computer keyboard.

Table 12.I gives the switch functions and settings for Switch Bank #3.

Allen-Bradley Parts

Table 12.I
Setting Switch Bank #3 – Serial Address (Remote I/O Units)

Address	Switch Selections								Address	Switch Selections							
	1	2	3	4	5	6	7	8		1	2	3	4	5	6	7	8
00	ON	ON	ON	ON	ON	ON	ON	ON	32	ON	ON	OFF	ON	ON	ON	ON	ON
01	ON	ON	ON	ON	ON	ON	ON	OFF	33	ON	ON	OFF	ON	ON	ON	ON	OFF
02	ON	ON	ON	ON	ON	ON	OFF	ON	34	ON	ON	OFF	ON	ON	ON	OFF	ON
03	ON	ON	ON	ON	ON	ON	OFF	OFF	35	ON	ON	OFF	ON	ON	ON	OFF	OFF
04	ON	ON	ON	ON	ON	OFF	ON	ON	36	ON	ON	OFF	ON	ON	OFF	ON	ON
05	ON	ON	ON	ON	ON	OFF	ON	OFF	37	ON	ON	OFF	ON	ON	OFF	ON	OFF
06	ON	ON	ON	ON	ON	OFF	OFF	ON	38	ON	ON	OFF	ON	ON	OFF	OFF	ON
07	ON	ON	ON	ON	ON	OFF	OFF	OFF	39	ON	ON	OFF	ON	ON	OFF	OFF	OFF
08	ON	ON	ON	ON	OFF	ON	ON	ON	40	ON	ON	OFF	ON	OFF	ON	ON	ON
09	ON	ON	ON	ON	OFF	ON	ON	OFF	41	ON	ON	OFF	ON	OFF	ON	ON	OFF
10	ON	ON	ON	ON	OFF	ON	OFF	ON	42	ON	ON	OFF	ON	OFF	ON	OFF	ON
11	ON	ON	ON	ON	OFF	ON	OFF	OFF	43	ON	ON	OFF	ON	OFF	ON	OFF	OFF
12	ON	ON	ON	ON	OFF	OFF	ON	ON	44	ON	ON	OFF	ON	OFF	OFF	ON	ON
13	ON	ON	ON	ON	OFF	OFF	ON	OFF	45	ON	ON	OFF	ON	OFF	OFF	ON	OFF
14	ON	ON	ON	ON	OFF	OFF	OFF	ON	46	ON	ON	OFF	ON	OFF	OFF	OFF	ON
15	ON	ON	ON	ON	OFF	OFF	OFF	OFF	47	ON	ON	OFF	ON	OFF	OFF	OFF	OFF
16	ON	ON	ON	OFF	ON	ON	ON	ON	48	ON	ON	OFF	OFF	ON	ON	ON	ON
17	ON	ON	ON	OFF	ON	ON	ON	OFF	49	ON	ON	OFF	OFF	ON	ON	ON	OFF
18	ON	ON	ON	OFF	ON	ON	OFF	ON	50	ON	ON	OFF	OFF	ON	ON	OFF	ON
19	ON	ON	ON	OFF	ON	ON	OFF	OFF	51	ON	ON	OFF	OFF	ON	ON	OFF	OFF
20	ON	ON	ON	OFF	ON	OFF	ON	ON	52	ON	ON	OFF	OFF	ON	OFF	ON	ON
21	ON	ON	ON	OFF	ON	OFF	ON	OFF	53	ON	ON	OFF	OFF	ON	OFF	ON	OFF
22	ON	ON	ON	OFF	ON	OFF	OFF	ON	54	ON	ON	OFF	OFF	ON	OFF	OFF	ON
23	ON	ON	ON	OFF	ON	OFF	OFF	OFF	55	ON	ON	OFF	OFF	ON	OFF	OFF	OFF
24	ON	ON	ON	OFF	OFF	ON	ON	ON	56	ON	ON	OFF	OFF	OFF	ON	ON	ON
25	ON	ON	ON	OFF	OFF	ON	ON	OFF	57	ON	ON	OFF	OFF	OFF	ON	ON	OFF
26	ON	ON	ON	OFF	OFF	ON	OFF	ON	58	ON	ON	OFF	OFF	OFF	ON	OFF	ON
27	ON	ON	ON	OFF	OFF	ON	OFF	OFF	59	ON	ON	OFF	OFF	OFF	ON	OFF	OFF
28	ON	ON	ON	OFF	OFF	OFF	ON	ON	60	ON	ON	OFF	OFF	OFF	OFF	ON	ON
29	ON	ON	ON	OFF	OFF	OFF	ON	OFF	61	ON	ON	OFF	OFF	OFF	OFF	ON	OFF
30	ON	ON	ON	OFF	OFF	OFF	OFF	ON	62	ON	ON	OFF	OFF	OFF	OFF	OFF	ON
31	ON	ON	ON	OFF	OFF	OFF	OFF	OFF	63	ON	ON	OFF	OFF	OFF	OFF	OFF	OFF

Table 12.I, continued
Setting Switch Bank #3 – Serial Address (Remote I/O Units)

Address	Switch Selections								Address	Switch Selections							
	1	2	3	4	5	6	7	8		1	2	3	4	5	6	7	8
64	ON	OFF	ON	ON	ON	ON	ON	ON	96	ON	OFF	OFF	ON	ON	ON	ON	ON
65	ON	OFF	ON	ON	ON	ON	ON	OFF	97	ON	OFF	OFF	ON	ON	ON	ON	OFF
66	ON	OF	ON	ON	ON	ON	OFF	ON	98	ON	OFF	OFF	ON	ON	ON	OFF	ON
67	ON	OFF	ON	ON	ON	ON	OFF	OFF	99	ON	OFF	OFF	ON	ON	ON	OFF	OFF
68	ON	OFF	ON	ON	ON	OFF	ON	ON	100	ON	OFF	OFF	ON	ON	OFF	ON	ON
69	ON	OFF	ON	ON	ON	OFF	ON	OFF	101	ON	OFF	OFF	ON	ON	OFF	ON	OFF
70	ON	OFF	ON	ON	ON	OFF	OFF	ON	102	ON	OFF	OFF	ON	ON	OFF	OFF	ON
71	ON	OFF	ON	ON	ON	OFF	OFF	OFF	103	ON	OFF	OFF	ON	ON	OFF	OFF	OFF
72	ON	OFF	ON	ON	OFF	ON	ON	ON	104	ON	OFF	OFF	ON	OFF	ON	ON	ON
73	ON	OFF	ON	ON	OFF	ON	ON	OFF	105	ON	OFF	OFF	ON	OFF	ON	ON	OFF
74	ON	OFF	ON	ON	OFF	ON	OFF	ON	106	ON	OFF	OFF	ON	OFF	ON	OFF	ON
75	ON	OFF	ON	ON	OFF	ON	OFF	OFF	107	ON	OFF	OFF	ON	OFF	ON	OFF	OFF
76	ON	OFF	ON	ON	OFF	OFF	ON	ON	108	ON	OFF	OFF	ON	OFF	OFF	ON	ON
77	ON	OFF	ON	ON	OFF	OFF	ON	OFF	109	ON	OFF	OFF	ON	OFF	OFF	ON	OFF
78	ON	OFF	ON	ON	OFF	OFF	OFF	ON	110	ON	OFF	OFF	ON	OFF	OFF	OFF	ON
79	ON	OFF	ON	ON	OFF	OFF	OFF	OFF	111	ON	OFF	OFF	ON	OFF	OFF	OFF	OFF
80	ON	OFF	ON	OFF	ON	ON	ON	ON	112	ON	OFF	OFF	OFF	ON	ON	ON	ON
81	ON	OFF	ON	OFF	ON	ON	ON	OFF	113	ON	OFF	OFF	OFF	ON	ON	ON	OFF
82	ON	OFF	ON	OFF	ON	ON	OFF	ON	114	ON	OFF	OFF	OFF	ON	ON	OFF	ON
83	ON	OFF	ON	OFF	ON	ON	OFF	OFF	115	ON	OFF	OFF	OFF	ON	ON	OFF	OFF
84	ON	OFF	ON	OFF	ON	OFF	ON	ON	116	ON	OFF	OFF	OFF	ON	OFF	ON	ON
85	ON	OFF	ON	OFF	ON	OFF	ON	OFF	117	ON	OFF	OFF	OFF	ON	OFF	ON	OFF
86	ON	OFF	ON	OFF	ON	OFF	OFF	ON	118	ON	OFF	OFF	OFF	ON	OFF	OFF	ON
87	ON	OFF	ON	OFF	ON	OFF	OFF	OFF	119	ON	OFF	OFF	OFF	ON	OFF	OFF	OFF
88	ON	OFF	ON	OFF	OFF	ON	ON	ON	120	ON	OFF	OFF	OFF	OFF	ON	ON	ON
89	ON	OFF	ON	OFF	OFF	ON	ON	OFF	121	ON	OFF	OFF	OFF	OFF	ON	ON	OFF
90	ON	OFF	ON	OFF	OFF	ON	OFF	ON	122	ON	OFF	OFF	OFF	OFF	ON	OFF	ON
91	ON	OFF	ON	OFF	OFF	ON	OFF	OFF	123	ON	OFF	OFF	OFF	OFF	ON	OFF	OFF
92	ON	OFF	ON	OFF	OFF	OFF	ON	ON	124	ON	OFF	OFF	OFF	OFF	OFF	ON	ON
93	ON	OFF	ON	OFF	OFF	OFF	ON	OFF	125	ON	OFF	OFF	OFF	OFF	OFF	ON	OFF
94	ON	OFF	ON	OFF	OFF	OFF	OFF	ON	126	ON	OFF	OFF	OFF	OFF	OFF	OFF	ON
95	ON	OFF	ON	OFF	OFF	OFF	OFF	OFF	127	ON	OFF	OFF	OFF	OFF	OFF	OFF	OFF

Allen-Bradley Parts

Table 12.I, continued
Setting Switch Bank #3 – Serial Address (Remote I/O Units)

	Switch Selections									Switch Selections							
Address	1	2	3	4	5	6	7	8	Address	1	2	3	4	5	6	7	8
128	OFF	ON	ON	ON	ON	ON	ON	ON	160	OFF	ON	OFF	ON	ON	ON	ON	ON
129	OFF	ON	ON	ON	ON	ON	ON	OFF	161	OFF	ON	OFF	ON	ON	ON	ON	OFF
130	OFF	ON	ON	ON	ON	ON	OFF	ON	162	OFF	ON	OFF	ON	ON	ON	OFF	ON
131	OFF	ON	ON	ON	ON	ON	OFF	OFF	163	OFF	ON	OFF	ON	ON	ON	OFF	OFF
132	OFF	ON	ON	ON	ON	OFF	ON	ON	164	OFF	ON	OFF	ON	ON	OFF	ON	ON
133	OFF	ON	ON	ON	ON	OFF	OFF	OFF	165	OFF	ON	OFF	ON	ON	OFF	ON	OFF
134	OFF	ON	ON	ON	ON	OFF	OFF	ON	166	OFF	ON	OFF	ON	ON	OFF	OFF	ON
135	OFF	ON	ON	ON	ON	OFF	OFF	OFF	167	OFF	ON	OFF	ON	ON	OFF	OFF	OFF
136	OFF	ON	ON	ON	OFF	ON	ON	ON	168	OFF	ON	OFF	ON	OFF	ON	ON	ON
137	OFF	ON	ON	ON	OFF	ON	ON	OFF	169	OFF	ON	OFF	ON	OFF	ON	ON	OFF
138	OFF	ON	ON	ON	OFF	ON	OFF	ON	170	OFF	ON	OFF	ON	OFF	ON	OFF	ON
139	OFF	ON	ON	ON	OFF	ON	OFF	OFF	171	OFF	ON	OFF	ON	OFF	ON	OFF	OFF
140	OFF	ON	ON	ON	OFF	OFF	ON	ON	172	OFF	ON	OFF	ON	OFF	OFF	ON	ON
141	OFF	ON	ON	ON	OFF	OFF	ON	OFF	173	OFF	ON	OFF	ON	OFF	OFF	ON	OFF
142	OFF	ON	ON	ON	OFF	OFF	OFF	ON	174	OFF	ON	OFF	ON	OFF	OFF	OFF	ON
143	OFF	ON	ON	ON	OFF	OFF	OFF	OFF	175	OFF	ON	OFF	ON	OFF	OFF	OFF	OFF
144	OFF	ON	ON	OFF	ON	ON	ON	ON	176	OFF	ON	OFF	OFF	ON	ON	ON	ON
145	OFF	ON	ON	OFF	ON	ON	ON	OFF	177	OFF	ON	OFF	OFF	ON	ON	ON	OFF
146	OFF	ON	ON	OFF	ON	ON	OFF	ON	178	OFF	ON	OFF	OFF	ON	ON	OFF	ON
147	OFF	ON	ON	OFF	ON	ON	OFF	OFF	179	OFF	ON	OFF	OFF	ON	ON	OFF	OFF
148	OFF	ON	ON	OFF	ON	OFF	ON	ON	180	OFF	ON	OFF	OFF	ON	OFF	ON	ON
149	OFF	ON	ON	OFF	ON	OFF	ON	OFF	181	OFF	ON	OFF	OFF	ON	OFF	ON	OFF
150	OFF	ON	ON	OFF	ON	OFF	OFF	ON	182	OFF	ON	OFF	OFF	ON	OFF	OFF	ON
151	OFF	ON	ON	OFF	ON	OFF	OFF	OFF	183	OFF	ON	OFF	OFF	ON	OFF	OFF	OFF
152	OFF	ON	ON	OFF	OFF	ON	ON	ON	184	OFF	ON	OFF	OFF	OFF	ON	ON	ON
153	OFF	ON	ON	OFF	OFF	ON	ON	OFF	185	OFF	ON	OFF	OFF	OFF	ON	ON	OFF
154	OFF	ON	ON	OFF	OFF	ON	OFF	ON	186	OFF	ON	OFF	OFF	OFF	ON	OFF	ON
155	OFF	ON	ON	OFF	OFF	ON	OFF	OFF	187	OFF	ON	OFF	OFF	OFF	ON	OFF	OFF
156	OFF	ON	ON	OFF	OFF	OFF	ON	ON	188	OFF	ON	OFF	OFF	OFF	OFF	ON	ON
157	OFF	ON	ON	OFF	OFF	OFF	ON	OFF	189	OFF	ON	OFF	OFF	OFF	OFF	ON	OFF
158	OFF	ON	ON	OFF	OFF	OFF	OFF	ON	190	OFF	ON	OFF	OFF	OFF	OFF	OFF	ON
159	OFF	ON	ON	OFF	OFF	OFF	OFF	OFF	191	OFF	ON	OFF	OFF	OFF	OFF	OFF	OFF

Table 12.I, continued
Setting Switch Bank #3 – Serial Address (Remote I/O Units)

Address	Switch Selections								Address	Switch Selections							
	1	2	3	4	5	6	7	8		1	2	3	4	5	6	7	8
192	OFF	OFF	ON	ON	ON	ON	ON	ON	224	OFF	OFF	OFF	ON	ON	ON	ON	ON
193	OFF	OFF	ON	ON	ON	ON	ON	OFF	225	OFF	OFF	OFF	ON	ON	ON	ON	OFF
194	OFF	OFF	ON	ON	ON	ON	OFF	ON	226	OFF	OFF	OFF	ON	ON	ON	OFF	ON
195	OFF	OFF	ON	ON	ON	ON	OFF	OFF	227	OFF	OFF	OFF	ON	ON	ON	OFF	OFF
196	OFF	OFF	ON	ON	ON	OFF	ON	ON	228	OFF	OFF	OFF	ON	ON	OFF	ON	ON
197	OFF	OFF	ON	ON	ON	OFF	ON	OFF	229	OFF	OFF	OFF	ON	ON	OFF	ON	OFF
198	OFF	OFF	ON	ON	ON	OFF	OFF	ON	230	OFF	OFF	OFF	ON	ON	OFF	OFF	ON
199	OFF	OFF	ON	ON	ON	OFF	OFF	OFF	231	OFF	OFF	OFF	ON	ON	OFF	OFF	OFF
200	OFF	OFF	ON	ON	OFF	ON	ON	ON	232	OFF	OFF	OFF	ON	OFF	ON	ON	ON
201	OFF	OFF	ON	ON	OFF	ON	ON	OFF	233	OFF	OFF	OFF	ON	OFF	ON	ON	OFF
202	OFF	OFF	ON	ON	OFF	ON	OFF	ON	234	OFF	OFF	OFF	ON	OFF	ON	OFF	ON
203	OFF	OFF	ON	ON	OFF	ON	OFF	OFF	235	OFF	OFF	OFF	ON	OFF	ON	OFF	OFF
204	OFF	OFF	ON	ON	OFF	OFF	ON	ON	236	OFF	OFF	OFF	ON	OFF	OFF	ON	ON
205	OFF	OFF	ON	ON	OFF	OFF	ON	OFF	237	OFF	OFF	OFF	ON	OFF	OFF	ON	OFF
206	OFF	OFF	ON	ON	OFF	OFF	OFF	ON	238	OFF	OFF	OFF	ON	OFF	OFF	OFF	ON
207	OFF	OFF	ON	ON	OFF	OFF	OFF	OFF	239	OFF	OFF	OFF	ON	OFF	OFF	OFF	OFF
208	OFF	OFF	ON	OFF	ON	ON	ON	ON	240	OFF	OFF	OFF	OFF	ON	ON	ON	ON
209	OFF	OFF	ON	OFF	ON	ON	ON	OFF	241	OFF	OFF	OFF	OFF	ON	ON	ON	OFF
210	OFF	OFF	ON	OFF	ON	ON	OFF	ON	242	OFF	OFF	OFF	OFF	ON	ON	OFF	ON
211	OFF	OFF	ON	OFF	ON	ON	OFF	OFF	243	OFF	OFF	OFF	OFF	ON	ON	OFF	OFF
212	OFF	OFF	ON	OFF	ON	OFF	ON	ON	244	OFF	OFF	OFF	OFF	ON	OFF	ON	ON
213	OFF	OFF	ON	OFF	ON	OFF	ON	OFF	245	OFF	OFF	OFF	OFF	ON	OFF	ON	OFF
214	OFF	OFF	ON	OFF	ON	OFF	OFF	ON	246	OFF	OFF	OFF	OFF	ON	OFF	OFF	ON
215	OFF	OFF	ON	OFF	ON	OFF	OFF	OFF	247	OFF	OFF	OFF	OFF	ON	OFF	OFF	OFF
216	OFF	OFF	ON	OFF	OFF	ON	ON	ON	248	OFF	OFF	OFF	OFF	OFF	ON	ON	ON
217	OFF	OFF	ON	OFF	OFF	ON	ON	OFF	249	OFF	OFF	OFF	OFF	OFF	ON	ON	OFF
218	OFF	OFF	ON	OFF	OFF	ON	OFF	ON	250	OFF	OFF	OFF	OFF	OFF	ON	OFF	ON
219	OFF	OFF	ON	OFF	OFF	ON	OFF	OFF	251	OFF	OFF	OFF	OFF	OFF	ON	OFF	OFF
220	OFF	OFF	ON	OFF	OFF	OFF	ON	ON	252	OFF	OFF	OFF	OFF	OFF	OFF	ON	ON
221	OFF	OFF	ON	OFF	OFF	OFF	ON	OFF	253	OFF	OFF	OFF	OFF	OFF	OFF	ON	OFF
222	OFF	OFF	ON	OFF	OFF	OFF	OFF	ON	254	OFF	OFF	OFF	OFF	OFF	OFF	OFF	ON
223	OFF	OFF	ON	OFF	OFF	OFF	OFF	OFF									

Allen-Bradley Parts

Parallel Port Unit

DIP Switch Locations

Two DIP switch banks are located on the back of the module. You can access the DIP switches through a cutout, as shown in Figure 12.2.

Figure 12.2
DIP Switch Locations on Parallel Port Version of DL40 Displays

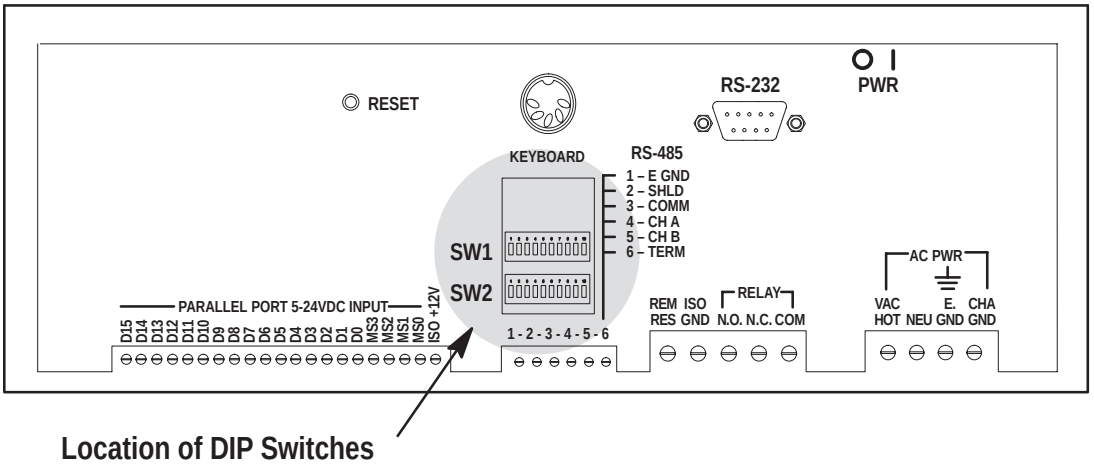

DIP Switch Functions

Switch Bank #1 (SW–1) controls: Debug Mode, Fast Reset Sequence, Keyboard Type, Select Enable.

Switch Bank #2 (SW–2) sets the serial address. The serial address refers to the address used for triggers received from the serial RS-485 port or computer keyboard.

Important: Remove power from The DL40 before setting any switch except Select Enable, SW1–9. Select Enable can be switched with power ON. Switch settings are scanned **only** on power-up. The new setting for Select Enable takes effect immediately. The new settings for all other switches take effect when you power-up or reset the DL40.

Table 12.J gives the switch functions and settings for Switch Bank #1 for Dataliner DL40 displays.

Setting Switch Bank #1

Note: A DIP switch is ON when in the “up” position.

Table 12.J
Setting Switch Bank #1 on Dataliner DL40 Displays (Parallel Port Units)

Switch	Description	Switch Settings	
		OFF	ON
1	Not Used		
2	Debug	Disabled	Enabled
3	Fast Reset	Disabled	Enabled
4	Not Used		
5	Not Used		
6	Keyboard	IBM–AT	IBM–XT
7	Not Used		
8	Not Used		
9	Select Enable	Disabled	Enabled
10	Not Used		

Debug (Switch #2)

If the Debug DIP switch is set to ON, then the current state of all of the parallel port inputs will be displayed on the DL40 at power up. If the Debug DIP switch is set to OFF, then the DL40 will enter the run mode at power up.

Fast Reset Sequence (Switch #3)

If the Fast Reset DIP switch is set to ON, the DL40 will display only the Firmware Version, Screen Test, and the Selected Run Mode. All other prompts will be skipped (but the tests will still be run). If any of the tests fail, then that error message will still appear. If the Fast Reset DIP switch is set to OFF, the DL40 will display the Firmware Version, Memory Verification, External Module Verification, Screen Test, RS-232 Port Settings, RS-485 Port Settings, and the Selected Run Mode.

Keyboard Type (Switch #6)

If the Keyboard Type DIP switch is set to ON, then an IBM-XT or compatible is the only type of keyboard that can be used. If the DIP switch is set to OFF then the IBM-AT or compatible is the only type of keyboard that can be used.

Select Enable (Switch #9)

If the Select Enable DIP switch is set to ON, then the SELECT button on the faceplate of the DL40 is enabled. If the Select Enable DIP switch is set to OFF, then the SELECT button on the faceplate of the DL40 is disabled.

Allen-Bradley Parts

Setting Switch Bank #2

Switch Bank #2 is used to set the serial address. The serial address refers to the address used for triggers received from the serial RS-485 port or computer keyboard.

Table 12.K
Setting Switch Bank #2 – Serial Address (Parallel Port Units)

	Switch Selections									Switch Selections							
Address	**1**	**2**	**3**	**4**	**5**	**6**	**7**	**8**	**Address**	**1**	**2**	**3**	**4**	**5**	**6**	**7**	**8**
00	ON	ON	ON	ON	ON	ON	ON	ON	32	ON	ON	OFF	ON	ON	ON	ON	ON
01	ON	ON	ON	ON	ON	ON	ON	OFF	33	ON	ON	OFF	ON	ON	ON	ON	OFF
02	ON	ON	ON	ON	ON	ON	OFF	ON	34	ON	ON	OFF	ON	ON	ON	OFF	ON
03	ON	ON	ON	ON	ON	ON	OFF	OFF	35	ON	ON	OFF	ON	ON	ON	OFF	OFF
04	ON	ON	ON	ON	ON	OFF	ON	ON	36	ON	ON	OFF	ON	ON	OFF	ON	ON
05	ON	ON	ON	ON	ON	OFF	ON	OFF	37	ON	ON	OFF	ON	ON	OFF	ON	OFF
06	ON	ON	ON	ON	ON	OFF	OFF	ON	38	ON	ON	OFF	ON	ON	OFF	OFF	ON
07	ON	ON	ON	ON	ON	OFF	OFF	OFF	39	ON	ON	OFF	ON	ON	OFF	OFF	OFF
08	ON	ON	ON	ON	OFF	ON	ON	ON	40	ON	ON	OFF	ON	OFF	ON	ON	ON
09	ON	ON	ON	ON	OFF	ON	ON	OFF	41	ON	ON	OFF	ON	OFF	ON	ON	OFF
10	ON	ON	ON	ON	OFF	ON	OFF	ON	42	ON	ON	OFF	ON	OFF	ON	OFF	ON
11	ON	ON	ON	ON	OFF	ON	OFF	OFF	43	ON	ON	OFF	ON	OFF	ON	OFF	OFF
12	ON	ON	ON	ON	OFF	OFF	ON	ON	44	ON	ON	OFF	ON	OFF	OFF	ON	ON
13	ON	ON	ON	ON	OFF	OFF	ON	OFF	45	ON	ON	OFF	ON	OFF	OFF	ON	OFF
14	ON	ON	ON	ON	OFF	OFF	OFF	ON	46	ON	ON	OFF	ON	OFF	OFF	OFF	ON
15	ON	ON	ON	ON	OFF	OFF	OFF	OFF	47	ON	ON	OFF	ON	OFF	OFF	OFF	OFF
16	ON	ON	ON	OFF	ON	ON	ON	ON	48	ON	ON	OFF	OFF	ON	ON	ON	ON
17	ON	ON	ON	OFF	ON	ON	ON	OFF	49	ON	ON	OFF	OFF	ON	ON	ON	OFF
18	ON	ON	ON	OFF	ON	ON	OFF	ON	50	ON	ON	OFF	OFF	ON	ON	OFF	ON
19	ON	ON	ON	OFF	ON	ON	OFF	OFF	51	ON	ON	OFF	OFF	ON	ON	OFF	OFF
20	ON	ON	ON	OFF	ON	OFF	ON	ON	52	ON	ON	OFF	OFF	ON	OFF	ON	ON
21	ON	ON	ON	OFF	ON	OFF	ON	OFF	53	ON	ON	OFF	OFF	ON	OFF	ON	OFF
22	ON	ON	ON	OFF	ON	OFF	OFF	ON	54	ON	ON	OFF	OFF	ON	OFF	OFF	ON
23	ON	ON	ON	OFF	ON	OFF	OFF	OFF	55	ON	ON	OFF	OFF	ON	OFF	OFF	OFF
24	ON	ON	ON	OFF	OFF	ON	ON	ON	56	ON	ON	OFF	OFF	OFF	ON	ON	ON
25	ON	ON	ON	OFF	OFF	ON	ON	OFF	57	ON	ON	OFF	OFF	OFF	ON	ON	OFF
26	ON	ON	ON	OFF	OFF	ON	OFF	ON	58	ON	ON	OFF	OFF	OFF	ON	OFF	ON
27	ON	ON	ON	OFF	OFF	ON	OFF	OFF	59	ON	ON	OFF	OFF	OFF	ON	OFF	OFF
28	ON	ON	ON	OFF	OFF	OFF	ON	ON	60	ON	ON	OFF	OFF	OFF	OFF	ON	ON
29	ON	ON	ON	OFF	OFF	OFF	ON	OFF	61	ON	ON	OFF	OFF	OFF	OFF	ON	OFF
30	ON	ON	ON	OFF	OFF	OFF	OFF	ON	62	ON	ON	OFF	OFF	OFF	OFF	OFF	ON
31	ON	ON	ON	OFF	OFF	OFF	OFF	OFF	63	ON	ON	OFF	OFF	OFF	OFF	OFF	OFF

Table 12.K, continued
Setting Switch Bank #2 – Serial Address (Parallel Port Units)

Address	Switch Selections								Address	Switch Selections							
	1	2	3	4	5	6	7	8		1	2	3	4	5	6	7	8
64	ON	OFF	ON	ON	ON	ON	ON	ON	96	ON	OFF	OFF	ON	ON	ON	ON	ON
65	ON	OFF	ON	ON	ON	ON	ON	OFF	97	ON	OFF	OFF	ON	ON	ON	ON	OFF
66	ON	OFF	ON	ON	ON	ON	OFF	ON	98	ON	OFF	OFF	ON	ON	ON	OFF	ON
67	ON	OFF	ON	ON	ON	ON	OFF	OFF	99	ON	OFF	OFF	ON	ON	ON	OFF	OFF
68	ON	OFF	ON	ON	ON	OFF	ON	ON	100	ON	OFF	OFF	ON	ON	OFF	ON	ON
69	ON	OFF	ON	ON	ON	OFF	ON	OFF	101	ON	OFF	OFF	ON	ON	OFF	ON	OFF
70	ON	OFF	ON	ON	ON	OFF	OFF	ON	102	ON	OFF	OFF	ON	ON	OFF	OFF	ON
71	ON	OFF	ON	ON	ON	OFF	OFF	OFF	103	ON	OFF	OFF	ON	ON	OFF	OFF	OFF
72	ON	OFF	ON	ON	OFF	ON	ON	ON	104	ON	OFF	OFF	ON	OFF	ON	ON	ON
73	ON	OFF	ON	ON	OFF	ON	ON	OFF	105	ON	OFF	OFF	ON	OFF	ON	ON	OFF
74	ON	OFF	ON	ON	OFF	ON	OFF	ON	106	ON	OFF	OFF	ON	OFF	ON	OFF	ON
75	ON	OFF	ON	ON	OFF	ON	OFF	OFF	107	ON	OFF	OFF	ON	OFF	ON	OFF	OFF
76	ON	OFF	ON	ON	OFF	OFF	ON	ON	108	ON	OFF	OFF	ON	OFF	OFF	ON	ON
77	ON	OFF	ON	ON	OFF	OFF	ON	OFF	109	ON	OFF	OFF	ON	OFF	OFF	ON	OFF
78	ON	OFF	ON	ON	OFF	OFF	OFF	ON	110	ON	OFF	OFF	ON	OFF	OFF	OFF	ON
79	ON	OFF	ON	ON	OFF	OFF	OFF	OFF	111	ON	OFF	OFF	ON	OFF	OFF	OFF	OFF
80	ON	OFF	ON	OFF	ON	ON	ON	ON	112	ON	OFF	OFF	OFF	ON	ON	ON	ON
81	ON	OFF	ON	OFF	ON	ON	ON	OFF	113	ON	OFF	OFF	OFF	ON	ON	ON	OFF
82	ON	OFF	ON	OFF	ON	ON	OFF	ON	114	ON	OFF	OFF	OFF	ON	ON	OFF	ON
83	ON	OFF	ON	OFF	ON	ON	OFF	OFF	115	ON	OFF	OFF	OFF	ON	ON	OFF	OFF
84	ON	OFF	ON	OFF	ON	OFF	ON	ON	116	ON	OFF	OFF	OFF	ON	OFF	ON	ON
85	ON	OFF	ON	OFF	ON	OFF	ON	OFF	117	ON	OFF	OFF	OFF	ON	OFF	ON	OFF
86	ON	OFF	ON	OFF	ON	OFF	OFF	ON	118	ON	OFF	OFF	OFF	ON	OFF	OFF	ON
87	ON	OFF	ON	OFF	ON	OFF	OFF	OFF	119	ON	OFF	OFF	OFF	ON	OFF	OFF	OFF
88	ON	OFF	ON	OFF	OFF	ON	ON	ON	120	ON	OFF	OFF	OFF	OFF	ON	ON	ON
89	ON	OFF	ON	OFF	OFF	ON	ON	OFF	121	ON	OFF	OFF	OFF	OFF	ON	ON	OFF
90	ON	OFF	ON	OFF	OFF	ON	OFF	ON	122	ON	OFF	OFF	OFF	OFF	ON	OFF	ON
91	ON	OFF	ON	OFF	OFF	ON	OFF	OFF	123	ON	OFF	OFF	OFF	OFF	ON	OFF	OFF
92	ON	OFF	ON	OFF	OFF	OFF	ON	ON	124	ON	OFF	OFF	OFF	OFF	OFF	ON	ON
93	ON	OFF	ON	OFF	OFF	OFF	ON	OFF	125	ON	OFF	OFF	OFF	OFF	OFF	ON	OFF
94	ON	OFF	ON	OFF	OFF	OFF	OFF	ON	126	ON	OFF	OFF	OFF	OFF	OFF	OFF	ON
95	ON	OFF	ON	OFF	OFF	OFF	OFF	OFF	127	ON	OFF	OFF	OFF	OFF	OFF	OFF	OFF

Allen-Bradley Parts

Table 12.K, continued
Setting Switch Bank #2 – Serial Address (Parallel Port Units)

	Switch Selections									Switch Selections							
Address	**1**	**2**	**3**	**4**	**5**	**6**	**7**	**8**	**Address**	**1**	**2**	**3**	4	**5**	**6**	**7**	**8**
128	OFF	ON	ON	ON	ON	ON	ON	ON	160	OFF	ON	OFF	ON	ON	ON	ON	ON
129	OFF	ON	ON	ON	ON	ON	ON	OFF	161	OFF	ON	OFF	ON	ON	ON	ON	OFF
130	OFF	ON	ON	ON	ON	ON	OFF	ON	162	OFF	ON	OFF	ON	ON	ON	OFF	ON
131	OFF	ON	ON	ON	ON	ON	OFF	OFF	163	OFF	ON	OFF	ON	ON	ON	OFF	OFF
132	OFF	ON	ON	ON	ON	OFF	ON	ON	164	OFF	ON	OFF	ON	ON	OFF	ON	ON
133	OFF	ON	ON	ON	ON	OFF	OFF	OFF	165	OFF	ON	OFF	ON	ON	OFF	ON	OFF
134	OFF	ON	ON	ON	ON	OFF	OFF	ON	166	OFF	ON	OFF	ON	ON	OFF	OFF	ON
135	OFF	ON	ON	ON	ON	OFF	OFF	OFF	167	OFF	ON	OFF	ON	ON	OFF	OFF	OFF
136	OFF	ON	ON	ON	OFF	ON	ON	ON	168	OFF	ON	OFF	ON	OFF	ON	ON	ON
137	OFF	ON	ON	ON	OFF	ON	ON	OFF	169	OFF	ON	OFF	ON	OFF	ON	ON	OFF
138	OFF	ON	ON	ON	OFF	ON	OFF	ON	170	OFF	ON	OFF	ON	OFF	ON	OFF	ON
139	OFF	ON	ON	ON	OFF	ON	OFF	OFF	171	OFF	ON	OFF	ON	OFF	ON	OFF	OFF
140	OFF	ON	ON	ON	OFF	OFF	ON	ON	172	OFF	ON	OFF	ON	OFF	OFF	ON	ON
141	OFF	ON	ON	ON	OFF	OFF	ON	OFF	173	OFF	ON	OFF	ON	OFF	OFF	ON	OFF
142	OFF	ON	ON	ON	OFF	OFF	OFF	ON	174	OFF	ON	OFF	ON	OFF	OFF	OFF	ON
143	OFF	ON	ON	ON	OFF	OFF	OFF	OFF	175	OFF	ON	OFF	ON	OFF	OFF	OFF	OFF
144	OFF	ON	ON	OFF	ON	ON	ON	ON	176	OFF	ON	OFF	OFF	ON	ON	ON	ON
145	OFF	ON	ON	OFF	ON	ON	ON	OFF	177	OFF	ON	OFF	OFF	ON	ON	ON	OFF
146	OFF	ON	ON	OFF	ON	ON	OFF	ON	178	OFF	ON	OFF	OFF	ON	ON	OFF	ON
147	OFF	ON	ON	OFF	ON	ON	OFF	OFF	179	OFF	ON	OFF	OFF	ON	ON	OFF	OFF
148	OFF	ON	ON	OFF	ON	OFF	ON	ON	180	OFF	ON	OFF	OFF	ON	OFF	ON	ON
149	OFF	ON	ON	OFF	ON	OFF	ON	OFF	181	OFF	ON	OFF	OFF	ON	OFF	ON	OFF
150	OFF	ON	ON	OFF	ON	OFF	OFF	ON	182	OFF	ON	OFF	OFF	ON	OFF	OFF	ON
151	OFF	ON	ON	OFF	ON	OFF	OFF	OFF	183	OFF	ON	OFF	OFF	ON	OFF	OFF	OFF
152	OFF	ON	ON	OFF	OFF	ON	ON	ON	184	OFF	ON	OFF	OFF	OFF	ON	ON	ON
153	OFF	ON	ON	OFF	OFF	ON	ON	OFF	185	OFF	ON	OFF	OFF	OFF	ON	ON	OFF
154	OFF	ON	ON	OFF	OFF	ON	OFF	ON	186	OFF	ON	OFF	OFF	OFF	ON	OFF	ON
155	OFF	ON	ON	OFF	OFF	ON	OFF	OFF	187	OFF	ON	OFF	OFF	OFF	ON	OFF	OFF
156	OFF	ON	ON	OFF	OFF	OFF	ON	ON	188	OFF	ON	OFF	OFF	OFF	OFF	ON	ON
157	OFF	ON	ON	OFF	OFF	OFF	ON	OFF	189	OFF	ON	OFF	OFF	OFF	OFF	ON	OFF
158	OFF	ON	ON	OFF	OFF	OFF	OFF	ON	190	OFF	ON	OFF	OFF	OFF	OFF	OFF	ON
159	OFF	ON	ON	OFF	OFF	OFF	OFF	OFF	191	OFF	ON	OFF	OFF	OFF	OFF	OFF	OFF

Table 12.K, continued
Setting Switch Bank #2 – Serial Address (Parallel Port Units)

Address	Switch Selections								Address	Switch Selections							
	1	2	3	4	5	6	7	8		1	2	3	4	5	6	7	8
192	OFF	OFF	ON	ON	ON	ON	ON	ON	224	OFF	OFF	OFF	ON	ON	ON	ON	ON
193	OFF	OFF	ON	ON	ON	ON	ON	OFF	225	OFF	OFF	OFF	ON	ON	ON	ON	OFF
194	OFF	OFF	ON	ON	ON	ON	OFF	ON	226	OFF	OFF	OFF	ON	ON	ON	OFF	ON
195	OFF	OFF	ON	ON	ON	ON	OFF	OFF	227	OFF	OFF	OFF	ON	ON	ON	OFF	OFF
196	OFF	OFF	ON	ON	ON	OFF	ON	ON	228	OFF	OFF	OFF	ON	ON	OFF	ON	ON
197	OFF	OFF	ON	ON	ON	OFF	ON	OFF	229	OFF	OFF	OFF	ON	ON	OFF	ON	OFF
198	OFF	OFF	ON	ON	ON	OFF	OFF	ON	230	OFF	OFF	OFF	ON	ON	OFF	OFF	ON
199	OFF	OFF	ON	ON	ON	OFF	OFF	OFF	231	OFF	OFF	OFF	ON	ON	OFF	OFF	OFF
200	OFF	OFF	ON	ON	OFF	ON	ON	ON	232	OFF	OFF	OFF	ON	OFF	ON	ON	ON
201	OFF	OFF	ON	ON	OFF	ON	ON	OFF	233	OFF	OFF	OFF	ON	OFF	ON	ON	OFF
202	OFF	OFF	ON	ON	OFF	ON	OFF	ON	234	OFF	OFF	OFF	ON	OFF	ON	OFF	ON
203	OFF	OFF	ON	ON	OFF	ON	OFF	OFF	235	OFF	OFF	OFF	ON	OFF	ON	OFF	OFF
204	OFF	OFF	ON	ON	OFF	OFF	ON	ON	236	OFF	OFF	OFF	ON	OFF	OFF	ON	ON
205	OFF	OFF	ON	ON	OFF	OFF	ON	OFF	237	OFF	OFF	OFF	ON	OFF	OFF	ON	OFF
206	OFF	OFF	ON	ON	OFF	OFF	OFF	ON	238	OFF	OFF	OFF	ON	OFF	OFF	OFF	ON
207	OFF	OFF	ON	ON	OFF	OFF	OFF	OFF	239	OFF	OFF	OFF	ON	OFF	OFF	OFF	OFF
208	OFF	OFF	ON	OFF	ON	ON	ON	ON	240	OFF	OFF	OFF	OFF	ON	ON	ON	ON
209	OFF	OFF	ON	OFF	ON	ON	ON	OFF	241	OFF	OFF	OFF	OFF	ON	ON	ON	OFF
210	OFF	OFF	ON	OFF	ON	ON	OFF	ON	242	OFF	OFF	OFF	OFF	ON	ON	OFF	ON
211	OFF	OFF	ON	OFF	ON	ON	OFF	OFF	243	OFF	OFF	OFF	OFF	ON	ON	OFF	OFF
212	OFF	OFF	ON	OFF	ON	OFF	ON	ON	244	OFF	OFF	OFF	OFF	ON	OFF	ON	ON
213	OFF	OFF	ON	OFF	ON	OFF	ON	OFF	245	OFF	OFF	OFF	OFF	ON	OFF	ON	OFF
214	OFF	OFF	ON	OFF	ON	OFF	OFF	ON	246	OFF	OFF	OFF	OFF	ON	OFF	OFF	ON
215	OFF	OFF	ON	OFF	ON	OFF	OFF	OFF	247	OFF	OFF	OFF	OFF	ON	OFF	OFF	OFF
216	OFF	OFF	ON	OFF	OFF	ON	ON	ON	248	OFF	OFF	OFF	OFF	OFF	ON	ON	ON
217	OFF	OFF	ON	OFF	OFF	ON	ON	OFF	249	OFF	OFF	OFF	OFF	OFF	ON	ON	OFF
218	OFF	OFF	ON	OFF	OFF	ON	OFF	ON	250	OFF	OFF	OFF	OFF	OFF	ON	OFF	ON
219	OFF	OFF	ON	OFF	OFF	ON	OFF	OFF	251	OFF	OFF	OFF	OFF	OFF	ON	OFF	OFF
220	OFF	OFF	ON	OFF	OFF	OFF	ON	ON	252	OFF	OFF	OFF	OFF	OFF	OFF	ON	ON
221	OFF	OFF	ON	OFF	OFF	OFF	ON	OFF	253	OFF	OFF	OFF	OFF	OFF	OFF	ON	OFF
222	OFF	OFF	ON	OFF	OFF	OFF	OFF	ON	254	OFF	OFF	OFF	OFF	OFF	OFF	OFF	ON
223	OFF	OFF	ON	OFF	OFF	OFF	OFF	OFF	255	OFF	OFF	OFF	OFF	OFF	OFF	OFF	OFF

Allen-Bradley Parts

Chapter 13

Specifications

Display Characters

Character Height	
Two line display	0.45 inch (11.55 mm)
Four line display	0.44 inch (11.3 mm)
Character Set	Standard & Extended ASCII Character Set
Characters Per Line	20
Character Type	Vacuum fluorescent, dot matrix (VFD)
Approximate Viewing Distance	
Two line display	25 feet (7.6 meters)
Four line display	25 feet (7.6 meters)

Electrical

Input Voltage	85–264 VAC
Input Power	45 VA max. at 85 VAC
Fuse Type	
USA	1.25 amperes, 250 volts AC, Type MDL
European	1.5 amperes, 250 volts AC, Type GMC

PLC Controller Remote I/O Communications

Allen–Bradley Programmable Controller via Allen–Bradley 1771 Remote I/O Link and 1747-SN module	
Remote I/O Baud Rate	57.6K, 115.2K, or 230.4K
Maximum I/O Cable Distance	10,000 feet (2800m) for 57.6K baud 5000 feet (1400m) for 115.2K baud 2500 feet (700m) for 230.4K baud
Rack Sizes	$^1/_4$, $^1/_2$, $^3/_4$ or 1 (any starting module)
Supports discrete I/O and block transfers	

Serial Communications Ports

Type	RS–232, RS–485
Baud Rate	300, 1200, 2400, 4800, 9600,19200
Parity (send only)	Odd, even, or none
Data Bits/Character	7 or 8

Keyboard Port

Type	IBM-XT, -AT
Connector	8 pin DIN

Parallel Input Port 5 to 24 volts DC

Note: 120 volts AC± 10% (47–63 Hz) can be used but **only** with optional input converters.

Voltage Range	High True Logic	Low True Logic
0 – 0.8 VDC	0 (OFF)	1 (ON)
0.8 – 3.5 VDC	Indeterminate	Indeterminate
3.5 – 24 VDC	1 (ON)	0 (OFF)

Parallel Input Port Communications

Data Lines	16
Strobe Lines	4
Output	+ 12 Volts DC out, 300mA maximum
Input	8mA per data line at 12 Volts DC

Environmental Specifications

Operating Temperature	0° to +60°C (+32° to + 140° F)
Storage Temperature	–40° to +85° C (–40° to +185°F)
Humidity	5% to 95% (no condensation)
NEMA Rating	NEMA Type 1,12,13 and 4X (indoor) (when mounted in a suitable enclosure)
Device Rating	UL Listed CSA Certified

Weights

2 Line Units	7.4 lbs. (3.4 kg.)
4 Line Units	9.2 lbs. (4.2 kg.)

Allen-Bradley Parts

Appendix A

Error & Status Messages

Message	Type	Meaning
xxxK MEMORY VERIFIED	Configuration/Status During Power–Up Message	Displays the size of the internal memory of this DL40. ”VERIFIED” indicates that the message file stored in the memory is intact.
xxxK MEMORY (BLANK)	Configuration/Status During Power–Up Message	Displays the size of the internal memory of this DL40. ”(BLANK)” indicates that no messages are stored in internal memory.
xxxK MODULE VERIFIED	Configuration/Status During Power–Up Message	Displayed when an external module is installed in the DL40. This module contains a valid DL40 file.
xxxK MODULE (BLANK)	Configuration/Status During Power–Up Message	Displayed when an external module is installed in the DL40. However, no DL40 messages are stored in this module.
BAD CODE ROM	Configuration/Status During Power–Up Error	Checksums on the DL40 firmware chips have failed. Contact your local Allen–Bradley service representative.
BAD INTERNAL MEMORY	Configuration/Status During Power–Up Error	This prompt indicates that an error was found in the internal message file. When this error occurs, the BAD INTERNAL MEMORY text will remain on the display until the DL40 is reset or powered down. All user messages are LOST! The user file should be reloaded after the unit is reset.
BAD LIMITS	Print Mode Error	When setting up the range for messages to be printed, the user entered a smaller ”LAST MESSAGE” than ”FIRST MESSAGE”. Re–enter the numbers correctly.
BAD MODULE	Configuration/Status During Power–Up Error	The external module is faulty. The contents of the module may be bad or the module circuitry has failed.
BAD SYS ATTRIBUTE	Tape Read/Write Error	The file being read from the tape was a valid DL40 file but the checksum on the System Attribute section of the file was bad. This could result from a corrupted tape, or electrical noise during transmission.
BAD SYSTEM RAM	Configuration/Status During Power–Up Error	Tests performed on the internal read/write memory of the DL40 have failed. This is failure of the DL40’s internal circuitry. Contact your local Allen–Bradley service representative.
BATTERY POSSIBLY BAD RESETTING HIST STACK	Configuration/Status During Power–Up Error	Checksums on data in the internal read/write memory failed. This could be caused by a bad battery or corruption of data in the DL40. All Historical Stack data is lost, but the DL40’s file containing the user’s messages is still intact.
xxxK MEMORY VERIFIED	On–Board Editor Error	The user has attempted to edit a message In the range of 1–16 or 901–916. See the OPTIONS menu (Chapter 6 or 7) to change Special Message range.
COMM TO PROG LOST	Remote Program Error	While in Remote Program Mode, the communication between the computer and the DL40 has been disrupted. When this error occurs, it is likely that the file transfer has not completed successfully. If downloading, the DL40 file has already been erased, a new file must be transferred to the DL40 before messages can be displayed. Disconnected cabling or faulted hardware in the communication link will cause this message to be displayed.

Message	Type	Meaning
CURSOR NOT ON VAR	On–Board Editor Error	The (Ctrl F) character (change formatted variable) was entered, but the cursor was not on a (Ctrl V) type variable. If you want to create a formatted variable, enter (Ctrl V), not (Ctrl F).
DATA REQ SPACE FULL	On–Board Editor Error	A DL40 message can contain only 20 (Ctrl X) ASCII Input Characters. This error is displayed when that number has been exceeded.
DISPLAY CODE ROM HAS INCORRECT CHECKSUM	Configuration/Status During Power–Up Error	This is an internal circuit failure of the DL40. Contact your local Allen–Bradley service representative.
DL40 NON–FUNCTIONAL MAIN CPU FAULT	Configuration/Status During Power–Up Error	This is an internal circuit failure of the DL40. Contact your local Allen–Bradley service representative.
ERROR WRITING MEMORY	General Error	While writing to its internal storage space, the DL40 could not write the data successfully. This is due to a failure of the DL40's circuitry. Try resetting the unit and repeating the operation. If that does not work, contact your local Allen–Bradley service representative.
ERROR WRITING MODULE	Read/Write External Module Error	While copying the file to the external memory module, the DL40 could not write the data successfully. This is due to a failure of the module's circuitry. Contact your local Allen–Bradley service representative.
INCOMPATIBLE FILE	Read/Write External Module Error	The file being read into the DL40 was created on a newer version DL40 or Off–Line Programming software. This DL40 cannot support this file.
INITIALIZING MEMORY	Configuration/Status During Power–Up Message	When the DL40 memory for file storage Is Uninitialized (after BAD INTERNAL MEMORY has been displayed), this warning will appear during the power–up sequence. This indicates that the DL40 is setting up default File Attributes and clearing message memory space. If a module is installed, the module's file data will be transferred to the DL40 at this time. With no module installed, the user's file must be downloaded again.
INITIALIZING MODULE	Configuration/Status During Power–Up Message	When an un–initialized or corrupted external module is detected by the DL40, the module is formatted as a blank module.
INVALID MSG NUMBER	On–Board Editor Error	The user attempted to edit message number 0. This Is not a valid number. Messages can be numbered from 1 to 9999.
INVALID MSG#:	Run Mode Error	When a triggering device has sent a message number that is not contained in the DL40 internal memory, this error will show the number sent. If the message number format is set to BCD, and non–BCD characters are sent to the DL40, this error will be displayed, but no number will follow.
INVALID TAPE HEADER	Tape Read/Write Error	Valid characters were received on the tape port; however, the format of the data received was incorrect. This is caused by reading a non–DL40 file from the tape, or reading a DL40 file that was corrupted on the tape.
LOADING EXT. MODULE	Configuration/Status During Power–Up Message	The DL40 is copying the external module file to internal memory after an un–initialized internal memory was found during power–up.
MAXIMUM LENGTH MSG	On–Board Editor Error	The maximum length of each DL40 message is 200 characters (10 lines of text). This warning is displayed when the user attempts to enter more than 200 characters.
MEMORY TOO SMALL	Read/Write External Module Error	The external module contains a DL40 file that is larger than the DL40's internal storage space.

Allen-Bradley Parts

Message	Type	Meaning
MESSAGE FILE IS FULL	On–Board Editor Message	This reminder is displayed when creating a new message or adding to an existing message. The internal memory space in the DL40 is filled. The amount of memory available is displayed as FILE FREE.. xx. xK *on the second line of the screen used* to enter the on–board editor.
MODULE TOO LARGE	Configuration/Status During Power–Up Error	The external module contains a DL40 file that is larger than the DL40's internal storage space.
MODULE TOO SMALL	Read/Write External Module Error	When requesting a write to external memory module, the internal file size is larger than the size of the module. Either the file must be reduced by deleting messages (Chapter 6 or 7) or a larger module must be installed.
NO INPUT FROM TAPE	Tape Read/Write Error	The DL40 has timed out waiting for tape input. No valid characters were received on the tape port. Verify that *READ FROM TAPE* was pressed on tape unit, baud rates are compatible, and cabling is correct (see Appendix C). If this message is displayed, the internal DL40 file has already been erased; a new file must be transferred to the DL40 before messages can be displayed.
NO MODULE INSTALLED	Read/Write External Module Error	The user has requested a copy to/from an external memory module, but the DL40 cannot detect its presence. If a module is installed, look for bent pins on the DL4O module connector. Otherwise, the module is faulted. Contact your local Allen–Bradley service representative.
NO MODULE PRESENT	Configuration/Status During Power–Up Error	The DL40 did not detect an external module during the power–up sequence.
NO PLC BLOCK XFERS	Run Mode Error	When you enable the Handshake DIP switch on the DL40, and the Block Transfer DIP switch is ON, the DL40 expects periodic *Block Transfer Read* requests from the PLC. If no *Block Transfer Read* requests are detected for one minute, this error is displayed. The message will be cleared when a *Block Transfer Read* is performed. When status from the DL40 is not required, the HANDSHAKE dip switch should be set to OFF to avoid getting this message.
NO PLC COMMUNICATION	Run Mode Error	The DL40 Remote I/0 port is not actively communicating with the PLC. Several things can cause this message to appear (but only when the DL40 is in the Run Mode). PLC not powered Loose or pulled Remote I/0 cable Reversed Remote I/0 cable wires Incorrect baud rate PLC not configured for this rack
NO PLC HANDSHAKE	Run Mode Error	When the user has enabled the Handshake DIP switch on the DL40, the Handshake Bit in the PLC input image must be continually copied over to the output image. If the DL40 does not see the bit returned in one minute, this error status will be displayed. See page 10–28.
ONLY 1 DATE CALLOUT	On–Board Editor Error	The (Ctrl Y) character (date callout) can only occur one time in a DL40 message. This error is displayed if you attempt to enter more than one.
ONLY 1 TIME CALLOUT	On–Board Editor Error	The (Ctrl T) character (time callout) can only occur one time in a DL40 message. This error is displayed if you attempt to enter more than one.

Message	Type	Meaning
PLC IN PROGRAM MODE	Run Mode Error	A status message indicating that the PLC is not in the RUN Mode, it is in PROGRAM Mode. The PLC is communicating with the DL40 correctly, but the PLC is unable to send message triggers or variables to the DL40 at this time.
PRINTER ERROR	Print Mode Error	While attempting to send data to the printer, an error was detected on the RS–232 port. This can be caused by a missing or incorrectly wired printer cable, improper baud/data bit/parity selections, or electrical noise picked up by the cable.
RACK CONFIG. ERROR	Configuration/Status During Power–Up Error	An invalid combination of rack size and starting module group have been entered on the DL40 DIP switches. An example of such an error would be a starting *module group* of 2, with a full rack size.
REMINDER: MSGS WON'T BE SENT TO SLAVES	On–Board Editor Message	This reminder is brought up when the RS–485 PORT USE parameter is changed from DL10 SLAVES to another value.
REMINDER: SET RS–485 PORT USE FOR SLAVES	On–Board Editor Error	This message is displayed if you set the *SEND TO SLAVE* message attribute to a legal slave address, but the RS–485 port usage is not set to *DL10 SLAVES.* It is also displayed when the Run Mode selection is changed to *MESSAGE/VARIABLE/SLAVE* but the RS–485 port usage is not set to *DL10 SLAVES.*
REMOTE I/0 CHIP FAIL	Configuration/Status During Power–Up Error	Occurs during DL40 power–up if tests in the internal Remote I/0 circuitry fail. Contact your local Allen–Bradley service representative.
TAPE READ ERROR	Tape Read/Write	The file being read from the tape was a valid DL40 file but the checksum on the Message Attributes section of the file was bad. This could result from a corrupted tape, or electrical noise during transmission.
TAPE RS–232 FAILURE	Tape Read/Write Error	Corrupted data was received on the RS–232 port for the tape. This could be caused by improper baud rates or electrical noise.
TAPE TIMEOUT	Tape Read/Write Error	The user has pressed the [Esc] key or [MSG ACK] push button. If this message is displayed, data written to the tape, if any, is not valid.
USER ABORTED COPY	Read/Write External Module Message	The user has pressed the [Esc] key or [MSG ACK] push button. If this message is displayed for a module read, the internal DL40 file has already been erased; a new file must be transferred to the DL40 before messages can be displayed. If this message is displayed for a module write, the data in the module is not valid.
USER ABORTED PRINT	Print Mode Message	The user has pressed the [Esc] key or [MSG ACK] push button to stop the printout.
USER ABORTED READ	Tape Read/Write Error	The user has pressed the [Esc] key or [MSG ACK] push button. If this message is displayed, the internal DL40 file has already been erased; a new file must be transferred to the DL40 before messages can be displayed.
USER ABORTED WRITE	Tape Read/Write Error	The user has pressed the [Esc] key or [MSG ACK] push button. If this message is displayed, the internal DL40 file has already been erased; a new file must be transferred to the DL40 before messages can be displayed.

Allen-Bradley Parts

Message	Type	Meaning
VARIABLE SPACE FULL	On–Board Editor Error	Each message in the DL40 can contain a limited number of *formatted* (Ctrl V) or ASCll BCD (Ctrl W) variables. A total of 40 variable units are allowed. Each (Ctrl V) variable requires 4 units. Each (Ctrl W) variable uses *2 units* if *CTRL–W* MEANS ASCII Each (Ctrl W variable uses *1 unit* if *CTRL–W* MEANS BCD.
VERSION x.xx y LINE	Configuration/Status During Power–Up Message	This is the first thing displayed by the DL40 when powered or reset. x.xx is the release number of the installed DL40 firmware. y is the number of display lines on the DL40, either 2 or 4.

Appendix B

Message Display Worksheets

Using the Worksheets

Use a photocopy of this worksheet to record the message number and content of the messages you create with the Offline Programming Software. For your convenience, we've provided worksheets for both two-line and four-line versions of the DL40.

Two Line Worksheet

MESSAGE NUMBER _____

MESSAGE NUMBER _____

MESSAGE NUMBER _____

MESSAGE NUMBER _____

MESSAGE NUMBER _____

Allen-Bradley Parts

Four Line Worksheet

MESSAGE NUMBER _____

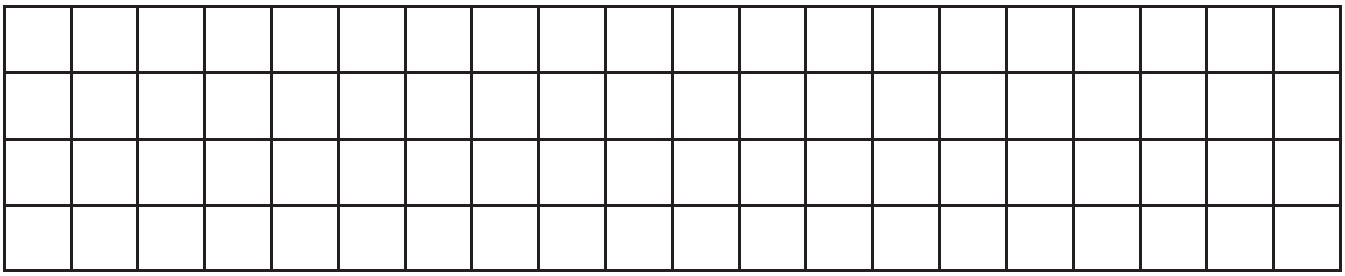

MESSAGE NUMBER _____

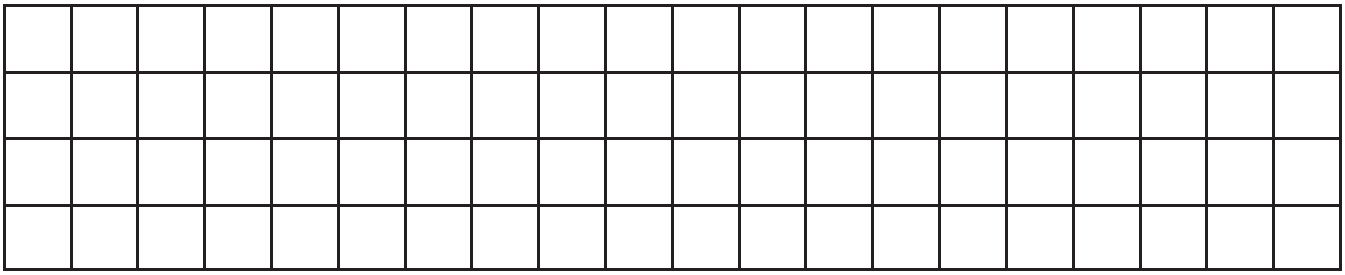

MESSAGE NUMBER _____

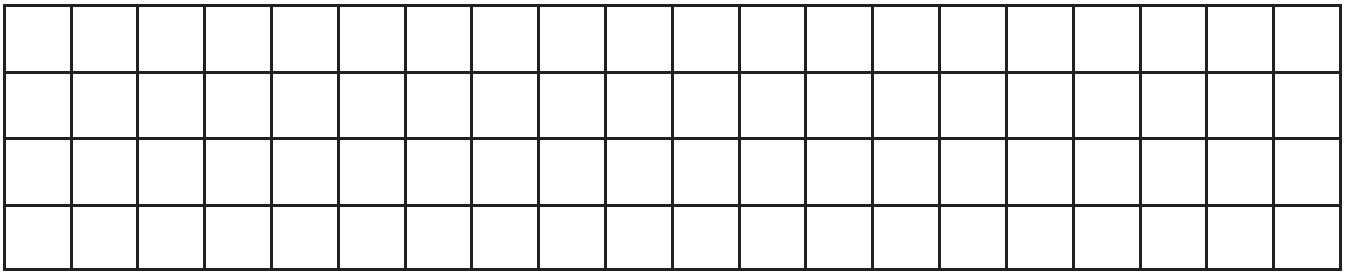

MESSAGE NUMBER _____

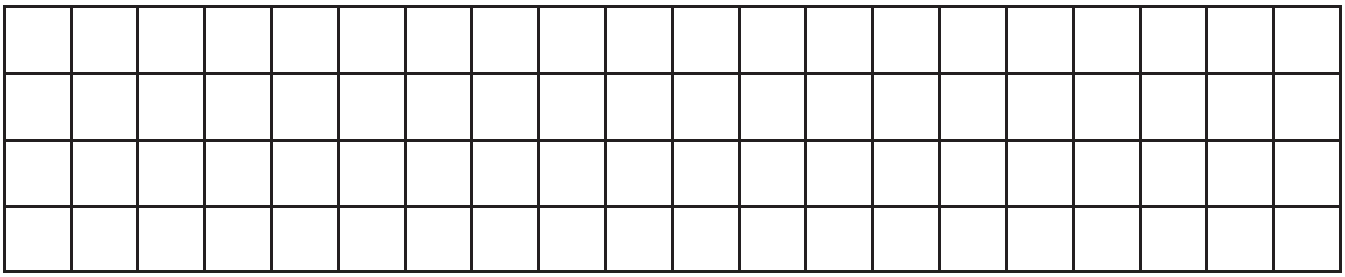

Appendix **C**

Cables

2706-NC12

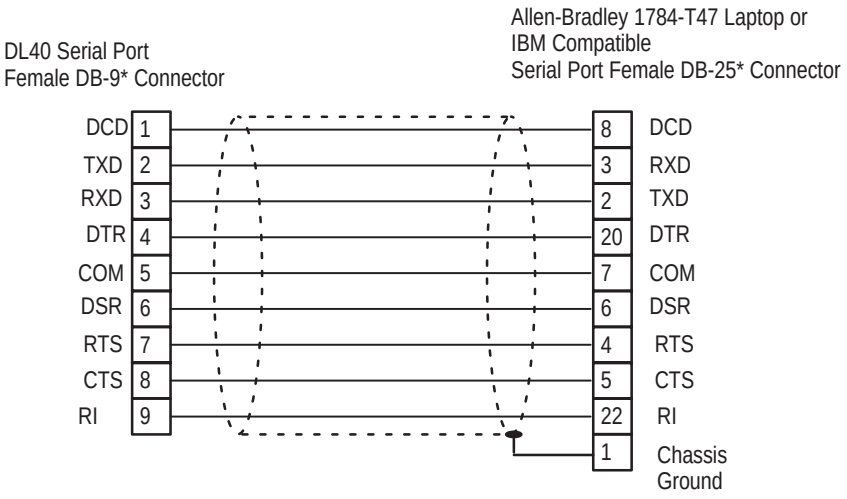

***** Gender specified is for the cable connectors.

2706-NC13

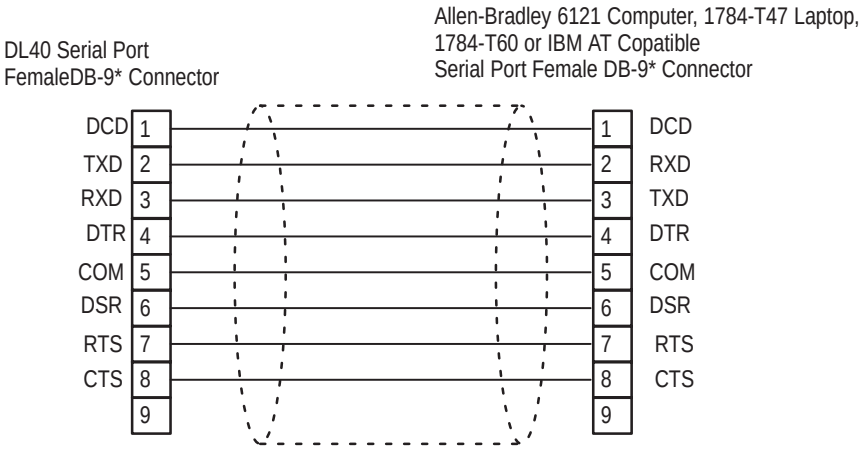

***** Gender specified is for the cable connectors.

Allen-Bradley Parts

2706-NC14

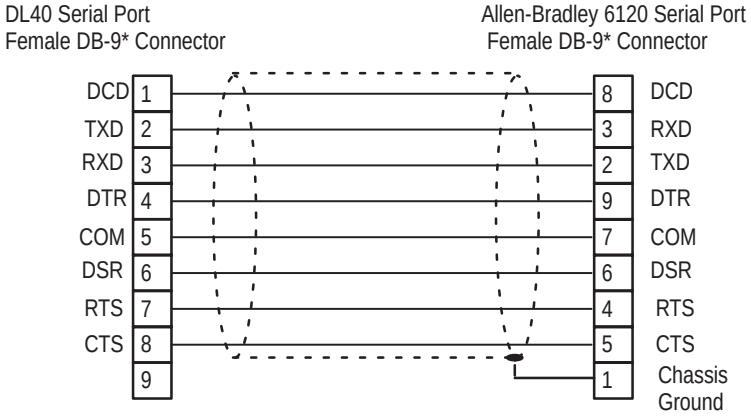

***** Gender specified is for the cable connectors.

2706-NC15

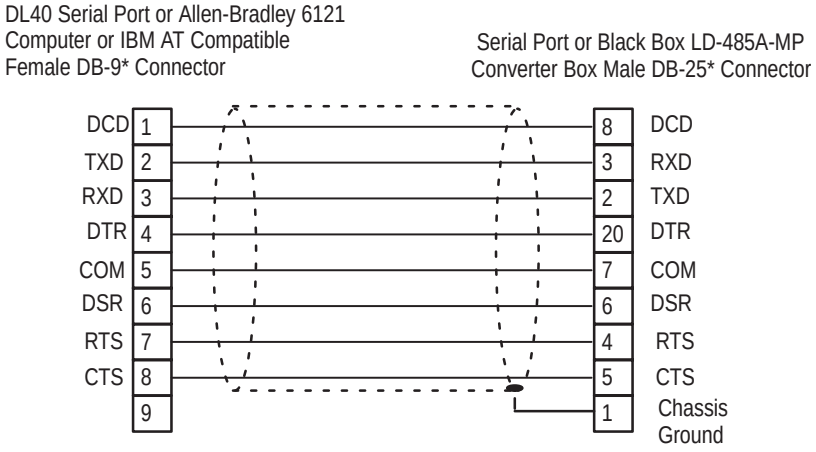

***** Gender specified is for the cable connectors.

DL40 to Allen-Bradley 1770-SA or -SB Tape Recorder

This cable must be assembled by the user.

For 1770-SA or -SB recorders connected to IBM PC/AT compatible 9-pin connector use 1784-CAS cable.

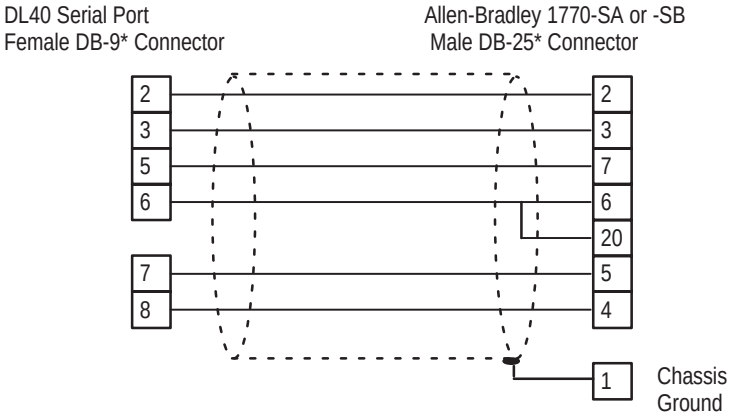

***** Gender specified is for the cable connectors.

Allen-Bradley Parts

Appendix D

ASCII & Extended ASCII Character Sets

ASCII Character Set

Dec.	Oct.	Hex	Char	Control Code	Dec.	Oct.	Hex	Char	Dec.	Oct.	Hex	Char	Dec.	Oct.	Hex	Char
0	000	00	NUL	CTRL @	32	040	20	SP	64	100	40	@	96	140	60	`
1	001	01	SOH	CTRL A	33	041	21	!	65	101	41	A	97	141	61	a
2	002	02	STX	CTRL B	34	042	22	"	66	102	42	B	98	142	62	b
3	003	03	ETX	CTRL C	35	043	23	#	67	103	43	C	99	143	63	c
4	004	04	EOT	CTRL D	36	044	24	$	68	104	44	D	100	144	64	d
5	005	05	ENQ	CTRL E	37	045	25	%	69	105	45	E	101	145	65	e
6	006	06	ACK	CTRL F	38	046	26	&	70	106	46	F	102	146	66	f
7	007	07	BEL	CTRL G	39	047	27	'	71	107	47	G	103	147	67	g
8	010	08	BS	CTRL H	40	050	28	(	72	110	48	H	104	150	68	h
9	011	09	HT	CTRL I	41	051	29	)	73	111	49	I	105	151	69	i
10	012	0A	LF	CTRL J	42	052	2A	*	74	112	4A	J	106	152	6A	j
11	013	0B	VT	CTRL K	43	053	2B	+	75	113	4B	K	107	153	6B	k
12	014	0C	FF	CTRL L	44	054	2C	,	76	114	4C	L	108	154	6C	l
13	015	0D	CR	CTRL M	45	055	2D	-	77	115	4D	M	109	155	6D	m
14	016	0E	SO	CTRL N	46	056	2E	.	78	116	4E	N	110	156	6E	n
15	017	0F	SI	CTRL O	47	057	2F	/	79	117	4F	O	111	157	6F	o
16	020	10	DLE	CTRL P	48	060	30	0	80	120	50	P	112	160	70	p
17	021	11	DC1	CTRL Q	49	061	31	1	81	121	51	Q	113	161	71	q
18	022	12	DC2	CTRL R	50	062	32	2	82	122	52	R	114	162	72	r
19	023	13	DC3	CTRL S	51	063	33	3	83	123	53	S	115	163	73	s
20	024	14	DC4	CTRL T	52	064	34	4	84	124	54	T	116	164	74	t
21	025	15	NAK	CTRL U	53	065	35	5	85	125	55	U	117	165	75	u
22	026	16	SYN	CTRL V	54	066	36	6	86	126	56	V	118	166	76	v
23	027	17	ETB	CTRL W	55	067	37	7	87	127	57	W	119	167	77	w
24	030	18	CAN	CTRL X	56	070	38	8	88	130	58	X	120	170	78	x
25	031	19	EM	CTRL Y	57	071	39	9	89	131	59	Y	121	171	79	y
26	032	1A	SUB	CTRL Z	58	072	3A	:	90	132	5A	Z	122	172	7A	z
27	033	1B	ESC	CTRL [	59	073	3B	;	91	133	5B	[	123	173	7B	{
28	034	1C	FS	CTRL \	60	074	3C	<	92	134	5C	\	124	174	7C	|
29	035	1D	GS	CTRL]	61	075	3D	=	93	135	5D	]	125	175	7D	}
30	036	1E	RS	CTRL ^	62	076	3E	>	94	136	5E	^	126	176	7E	~
31	037	1F	US	CTRL _	63	077	3F	?	95	137	5F	_	127	177	7F	⌂

Extended ASCII Character Set

To enter an extended ASCII character, use the [ALT] key in combination with the numeric keypad section on your keyboard. *Hold down* the [ALT] key, then enter one of the decimal values found in the extended ASCII character chart below. The selected character will appear in the offline message window when you release the [ALT] key. Extended ASCII characters *are not available* with the onboard editor.

Dec.	Oct.	Hex	Char	Dec.	Oct.	Hex	Char	Dec.	Oct.	Hex	Char	Dec.	Oct.	Hex	Char
128	200	80	Ç	160	240	A0	á	192	300	C0	└	224	340	E0	α
129	201	81	ü	161	241	A1	í	193	301	C1	┴	225	341	E1	β
130	202	82	é	162	242	A2	ó	194	302	C2	┬	226	342	E2	Γ
131	203	83	â	163	243	A3	ú	195	303	C3	├	227	343	E3	π
132	204	84	ä	164	244	A4	ñ	196	304	C4	─	228	344	E4	Σ
133	205	85	à	165	245	A5	Ñ	197	305	C5	┼	229	345	E5	σ
134	206	86	å	166	246	A6	ª	198	306	C6	╞	230	346	E6	µ
135	207	87	ç	167	247	A7	º	199	307	C7	╟	231	347	E7	τ
136	210	88	ê	168	250	A8	¿	200	310	C8	╚	232	350	E8	Φ
137	211	89	ë	169	251	A9	⌐	201	311	C9	╔	233	351	E9	Θ
138	212	8A	è	170	252	AA	¬	202	312	CA	╩	234	352	EA	Ω
139	213	8B	ï	171	253	AB	1/2	203	313	CB	╦	235	353	EB	δ
140	214	8C	î	172	254	AC	1/4	204	314	CC	╠	236	354	EC	∞
141	215	8D	ì	173	255	AD	¡	205	315	CD	═	237	355	ED	∅
142	216	8E	Ä	174	256	AE	<<	206	316	CE	╬	238	356	EE	∈
143	217	8F	Å	175	257	AF	>>	207	317	CF	╧	239	357	EF	∩
144	220	90	É	176	260	B0	▓	208	320	D0	╨	240	360	F0	≡
145	221	91	æ	177	261	B1	▒	209	321	D1	╤	241	361	F1	±
146	222	92	Æ	178	262	B2	▓	210	322	D2	╥	242	362	F2	≥
147	223	93	Ô	179	263	B3	│	211	323	D3	╙	243	363	F3	≤
148	224	94	ö	180	264	B4	┤	212	324	D4	╘	244	364	F4	⌠
149	225	95	ò	181	265	B5	╡	213	325	D5	╒	245	365	F5	⌡
150	226	96	û	182	266	B6	╢	214	326	D6	╓	246	366	F6	÷
151	227	97	ù	183	267	B7	╖	215	327	D7	╫	247	367	F7	≈
152	230	98	ÿ	184	270	B8	╕	216	330	D8	╪	248	370	F8	°
153	231	99	Ö	185	271	B9	╣	217	331	D9	┘	249	371	F9	•
154	232	9A	Ü	186	272	BA	║	218	332	DA	┌	250	372	FA	·
155	233	9B	¢	187	273	BB	╗	219	333	DB	▮	251	373	FB	√
156	234	9C	£	188	274	BC	╝	220	334	DC	▄	252	374	FC	n
157	235	9D	¥	189	275	BD	╜	221	335	DD	▌	253	375	FD	²
158	236	9E	Pt	190	276	BE	╛	222	336	DE	▐	254	376	FE	■
159	237	9F	ƒ	191	277	BF	┐	223	337	DF	▀	255	377	FF	

Allen-Bradley Parts

Symbols

[CTRL][V], 9 – 6
[CTRL][W], 9 – 6
[CTRL]F, 7 – 5
[CTRL]T, 7 – 6
[CTRL]V, 7 – 4
[CTRL]W, 7 – 5
[CTRL]X, 7 – 6, 7 – 11
[MSG ACK], 7 – 12

Numbers

2706-NG2 Input Converter, 9 – 4

A

AC output module, 9 – 4
Accessories, 2 – 13
Acknowledge bit, 10 – 11
Acknowledge message, 7 – 12
  and message queueing, 7 – 12
Add/Delete bit, 10 – 11
Address, slave, 10 – 13
Addressing, partial rack, 10 – 5
Alarm relay, 2 – 7, 7 – 10
Archive media, 2 – 5
ASCII data, 2 – 5
  request for, 7 – 6
  word length, 7 – 5
ASCII variable, insert, 7 – 5
AutoClear, 7 – 9
  with relay, 7 – 10
AutoRepeat, 7 – 10
  and Historical Events Stack, 7 – 11
Auxiliary devices, 2 – 7

B

Backup media, 2 – 5
Bar code data, 2 – 5
BCD data, 2 – 8
  word length, 7 – 5
BCD sign bit, 9 – 5, 10 – 11
BCD variable, insert, 7 – 5
Binary Coded Decimal data. *See BCD data*
Binary data, 2 – 8
Binary vs. BCD numbering, 9 – 2
Bit transfers, 10 – 5
Bit trigger priority size, 10 – 13
Bit Trigger Run Mode, 3 – 6–3 – 9
Bit Trigger Table, 3 – 6–3 – 8
  and stack, 6 – 2
Block transfer, 10 – 18, 10 – 23, 10 – 27
Block transfer enabled DIP switch, 12 – 5
Block transfers, 10 – 5
  enabling, 10 – 8
Brightness, setting, 5 – 7

C

Caps Lock key, 2 – 12
Catalog numbers, 2 – 12
Chain messages, 2 – 8, 7 – 10
  with AutoRepeat, 7 – 10
Change formatted variable, 7 – 5
Clear Display, 5 – 1
Clear Historical Events Stack, 5 – 4
Clear Queue, 5 – 2
Clock data, 2 – 6
Clock setting, 5 – 4, 5 – 5
Clock/Date data bit, 10 – 11
Code, diagnostic, 10 – 11
Completion of a message, 3 – 1
Compound variables, 7 – 5

D

Data format, and parallel port, 9 – 2
Data hold time, 9 – 7
Data mode, 2 – 8
Date, 2 – 6
  insert in message, 7 – 6
  sending to a PLC, 5 – 6
Date data bit. *See* Clock/Date data bit
Date stamp, messages on stack, 6 – 2
Date variable, length in characters, 7 – 7
DC output module, 9 – 4
Debug DIP switch, 12 – 12

Debug mode, 2 – 6
Device specifications
  logical, 10 – 1
  physical, 10 – 1
Devices, auxiliary, 2 – 7
Diagnostic code, 10 – 11
DIP switch
  block transfer enabled, 12 – 5
  debug, 12 – 12
  handshake enable, 12 – 5
  keyboard type, 12 – 5, 12 – 12
  last chassis, 12 – 5
  last state, 12 – 5
  rast reset, 12 – 5, 12 – 12
  select button enable, 12 – 6
  select enable, 12 – 12
DIP switch settings, and keyboard type, 8 – 3
Discrete I/O, 10 – 8
Display intensity, setting, 5 – 7
Display message on what line, 7 – 8
Display parameters, viewing, 5 – 6
Distance, viewing, 2 – 1
DL40
  capabilities, 2 – 2
  versions, 2 – 1

E

Editing rules, 7 – 3
Embedded variables, 2 – 7
Enter bit, 10 – 11

F

Fast reset DIP switch, 12 – 5, 12 – 12
File transfer, hardware, 2 – 10–2 – 12
Formatted variable, 7 – 4
  vs. unformatted variable, 7 – 5

H

Handshake bit, 10 – 12, 10 – 28
Handshake enable DIP switch, 12 – 5
Hardware, required for file transfer, 2 – 10–2 – 12
Hardware versions, 2 – 1
Help Mode, 6 – 1
Hide message on display, 7 – 11
High True Logic, 9 – 2
Historical Events Stack, 6 – 1, 7 – 11
  and AutoRepeat, 7 – 11
  overview, 2 – 6
Historical Recall Mode, 6 – 1–6 – 6
Hold time, 9 – 7

I

Input converter, 9 – 4
Input voltage, and 2706-NG2 Input Converter, 9 – 4
Insert ASCII or BCD Variable, 7 – 5
Insert date, 7 – 6
Insert time, 7 – 6

K

Keyboard, DIP switch settings, 8 – 3
Keyboard commands, summary table, 8 – 2
Keyboard Port, uses of, 8 – 2
Keyboard type DIP switch, 12 – 5, 12 – 12
Keyboards, compatible, 2 – 12
Keys, special, 7 – 3

L

Last chassis DIP switch, 12 – 5
Last state DIP switch, 12 – 5
Length of message list, 10 – 12
Logic voltage levels, 9 – 4
Logical specifications, 10 – 1
Low True Logic, 9 – 2

M

Message, sending to stack, 7 – 11
Message attributes
  defined, 7 – 7

Allen-Bradley Parts

with variables, 7 – 7
Message chaining, 2 – 8, 7 – 10
disabled with AutoRepeat, 7 – 10
Message completion, 3 – 1
Message list, length of, 10 – 12
Message List Run Mode, 3 – 5–3 – 6, 4 – 3–4 – 4
Message number, 10 – 12
priority, 10 – 13
Message time, sending to stack, 7 – 11
Message/Variable Run Mode, 3 – 5
Message/Variable/Slave Run Mode, 3 – 2–3 – 5, 4 – 2–4 – 3
Messages, special, 2 – 10
Modes, 2 – 9
Help, 6 – 1
Historical Recall, 6 – 1–6 – 6

N

Num Lock key, 2 – 12
Numbering systems, binary vs. BCD, 9 – 2

O

Onboard editor, 2 – 5
Open Protocol, 11 – 9
Operating Modes, 2 – 9
Options, 2 – 13
Output image table, 10 – 14
Output module, 9 – 4

P

Parallel Port, connections, 9 – 1
Parallel port units, 6 – 13
Parallel version, Run Mode types, 4 – 2
Parallel version Run Modes, 4 – 1
Partial rack addressing, 10 – 5
PassThrough file transfers, 2 – 3
PassThrough processing, hardware, 2 – 10–2 – 12
Physical specifications, 10 – 1
PLC
sending date to, 5 – 6
sending time to, 5 – 6
using with DL40, 10 – 1
Port settings
for slave display, 7 – 9
RS-485, 6 – 12
triggering, 6 – 13
Print Historical Stack
chronological order, 5 – 2
frequency of occurrence, 5 – 3
Print message, 7 – 8
Printer port settings, RS-232, 6 – 12
Printers, 2 – 7
Priority message number, 10 – 13
Priority Message Number Section, 3 – 7–3 – 9
Priority Section, 3 – 7
Priority section, 10 – 13
Prompt, underscore, 7 – 11

Q

Queue, clear, 5 – 2

R

Relay, 7 – 10
with AutoClear, 7 – 10
Remote I/O, Run Mode types, 3 – 2
Remote I/O units, 6 – 13
Remote I/O version Run Modes, 3 – 1
Repeat message, 7 – 9
Repeat message automatically, 7 – 10
Repeating messages, 7 – 10
Request for ASCII data, 7 – 6
Reset Unit, 5 – 2
Resume Run Mode, Special Messages, 5 – 7
Round Robin Section, 3 – 8
Round robin section, 10 – 13
RS-232 port, uses of, 8 – 1
RS-232 printer port settings, 6 – 12

RS-232 tape recorder settings, 6 – 12
RS-485 Port
and multiple DL40s, 8 – 2
set to open protocol, 11 – 9
RS-485 port, uses of, 8 – 1
RS-485 port settings, 6 – 12
Run Mode
Message/Variable/Slave, 3 – 2–3 – 5
overview, 3 – 1
Run Modes, 2 – 9–2 – 12
Bit Trigger, 3 – 6–3 – 9
Message List, 3 – 5–3 – 6, 4 – 3–4 – 4
Message/Variable, 3 – 5
Message/Variable/Slave, 4 – 2–4 – 3
overview, 4 – 1

S

Scanner module, 10 – 5
Scroll message, 7 – 8, 7 – 9
Select button enable DIP switch, 12 – 6
Select enable DIP switch, 12 – 12
Send Date to PLC, 5 – 6
Send message time to the stack, 7 – 11
Send message to slave, 7 – 8
RS-485 Port setting, 8 – 1
Send message to the stack, 7 – 11
Send Time to PLC, 5 – 6
Setting the clock, 5 – 4, 5 – 5
Sign bit, BCD, 9 – 5, 10 – 11
Slave address, 10 – 13
Slave devices, 6 – 13
Slave display, 2 – 7
Port settings for, 7 – 9
Special keys, 7 – 3
Special Messages
901 (or 01), 5 – 1
902 (or 02), 5 – 2
903 (or 03), 5 – 2
904 (or 04), 5 – 2
905 (or 05), 5 – 2
906 (or 06), 5 – 2
907 (or 07), 5 – 3
908 (or 08), 5 – 3
909 (or 09), 5 – 4
910 (or 10), 5 – 4
911 (or 11), 5 – 5
912 (or 12), 5 – 6
913 (or 13), 5 – 6
914 (or 14), 5 – 6
915 (or 15), 5 – 7
916 (or 16), 5 – 7
Clear Display and Queue, 5 – 2
Clear Historical Events Stack, 5 – 4
Clear Queue, 5 – 2
Interactive Clock Setting, 5 – 4
Print Historical Events Stack – Chronological Order, 5 – 2
Print Historical Events Stack – Frequency of Occurrence, 5 – 3
Reset Unit, 5 – 2
Send Date to PLC, 5 – 6
Send Time to PLC, 5 – 6
Set Clock with Variable Data, 5 – 5
Set Display Intensity, 5 – 7
Stop Special Messages/Resume Run Mode, 5 – 7
Terminate Message – Clear Display, 5 – 1
Test Display, 5 – 2
View Display Parameters, 5 – 6
View Historical Events Stack, 5 – 3
Special messages, 2 – 10
table of, 5 – 1
Stack
Historical Event, 6 – 1
Historical Events, 7 – 11
sending message time to, 7 – 11
Special Messages, 5 – 2
Sub-scanner, with PLC 5/15, 10 – 6

T

Table of Special Messages, 5 – 1

Allen-Bradley Parts

Tape, archiving internal application memory, 8 – 1
Tape recorder, RS-232 port settings, 6 – 12
Terminate Message, 5 – 1
Test Display, 5 – 2
Time, 2 – 6
  insert in message, 7 – 6
  sending to a PLC, 5 – 6
Time stamp, messages on stack, 6 – 2
Time variable, length in characters, 7 – 6
Triggering port settings, 6 – 13

U

Underscore prompt, 7 – 11

V

Variable, formatted, 7 – 4
Variable data, message attributes with, 7 – 7
Variables, 7 – 4
  compound, 7 – 5
  embedded, 2 – 7
View Display Parameters, 5 – 6
View Historical Events Stack, 5 – 3
Viewing distance, 2 – 1
Voltage, logic levels, 9 – 4
Voltage levels, logic, 9 – 4

W

Wait time for message, 7 – 9
Word length, ASCII or BCD data, 7 – 5

Rockwell Automation

Rockwell Automation helps its customers receive a superior return on their investment by bringing together leading brands in industrial automation, creating a broad spectrum of easy-to-integrate products. These are supported by local technical resources available worldwide, a global network of system solutions providers, and the advanced technology resources of Rockwell.

Worldwide representation.

Argentina • Australia • Austria • Bahrain • Belgium • Bolivia • Brazil • Bulgaria • Canada • Chile • China, People's Republic of • Colombia • Costa Rica • Croatia • Cyprus Czech Republic • Denmark • Dominican Republic • Ecuador • Egypt • El Salvador • Finland • France • Germany • Ghana • Greece • Guatemala • Honduras • Hong Kong Hungary • Iceland • India • Indonesia • Iran • Ireland • Israel • Italy • Jamaica • Japan • Jordan • Korea • Kuwait • Lebanon • Macau • Malaysia • Malta • Mexico • Morocco The Netherlands • New Zealand • Nigeria • Norway • Oman • Pakistan • Panama • Peru • Philippines • Poland • Portugal • Puerto Rico • Qatar • Romania • Russia • Saudi Arabia • Singapore • Slovakia • Slovenia • South Africa, Republic of • Spain • Sweden • Switzerland • Taiwan • Thailand • Trinidad • Tunisia • Turkey • United Arab Emirates United Kingdom • United States • Uruguay • Venezuela

Rockwell Automation Headquarters, 1201 South Second Street, Milwaukee, WI 53204-2496 USA, Tel: (1) 414 382-2000 Fax: (1) 414 382-4444
Rockwell Automation European Headquarters, Avenue Hermann Debroux, 46, 1160 Brussels, Belgium, Tel: (32) 2 663 06 00, Fax: (32) 2 663 06 40
Rockwell Automation Asia Pacific Headquarters, 27/F Citicorp Centre, 18 Whitfield Road, Causeway Bay, Hong Kong, Tel: (852) 2887 4788, Fax: (852) 2508 1846
World Wide Web: http://www.ab.com

Allen-Bradley Parts

Publication 2706-807 – July 1995
Supersedes Catalog Number 2706-ND002 Series B
Supersedes Catalog Number 2706-ND003 Series B

40061-276-01(A)
Copyright 1995 Allen-Bradley Company, Inc. Printed in USA