CAB. WIDTH	DIM. E	DIM. F
20"	17.25"	5.25"
25"	22.25"	7.75"
30"	27.25"	10.25"
35"	32.25"	12.25"

TYPE OF MTG.	AVAIL. DEPTH 15"	AVAIL. DEPTH 20"	DIM. A	DIM. B	DIM. C	DIM. D
"Z"BAR	X	X	8.672"	—	—	—
REAR FLG. "C"CHNL.	X	X	—	11.593"	—	—
CHNL. EXT.	X	X	—	—	14.06"	—
CHNL. EXT.	—	X	—	—	—	19.06"

TYPE OF MTG.	AVAIL. DEPTH 25"	DIM. A	DIM. B	DIM. C	DIM. D
"Z"BAR	X	13.672"	—	—	—
REAR FLG. "C"CHNL.	X	—	16.593"	—	—
CHNL. EXT.	X	—	—	19.06"	—
CHNL. EXT.	X	—	—	—	24.06"

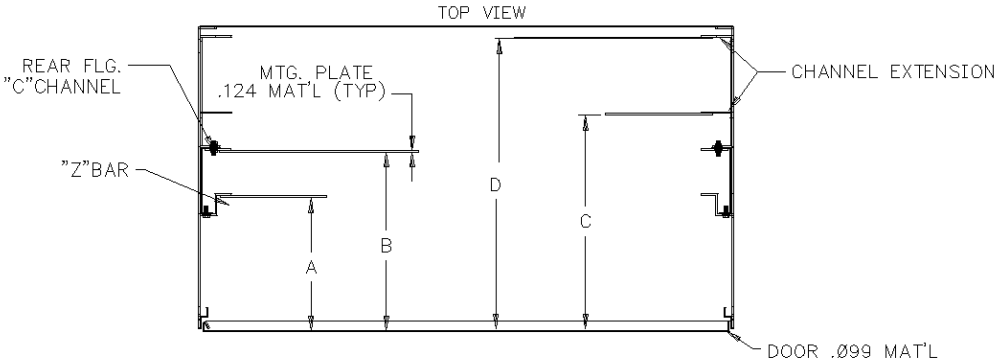

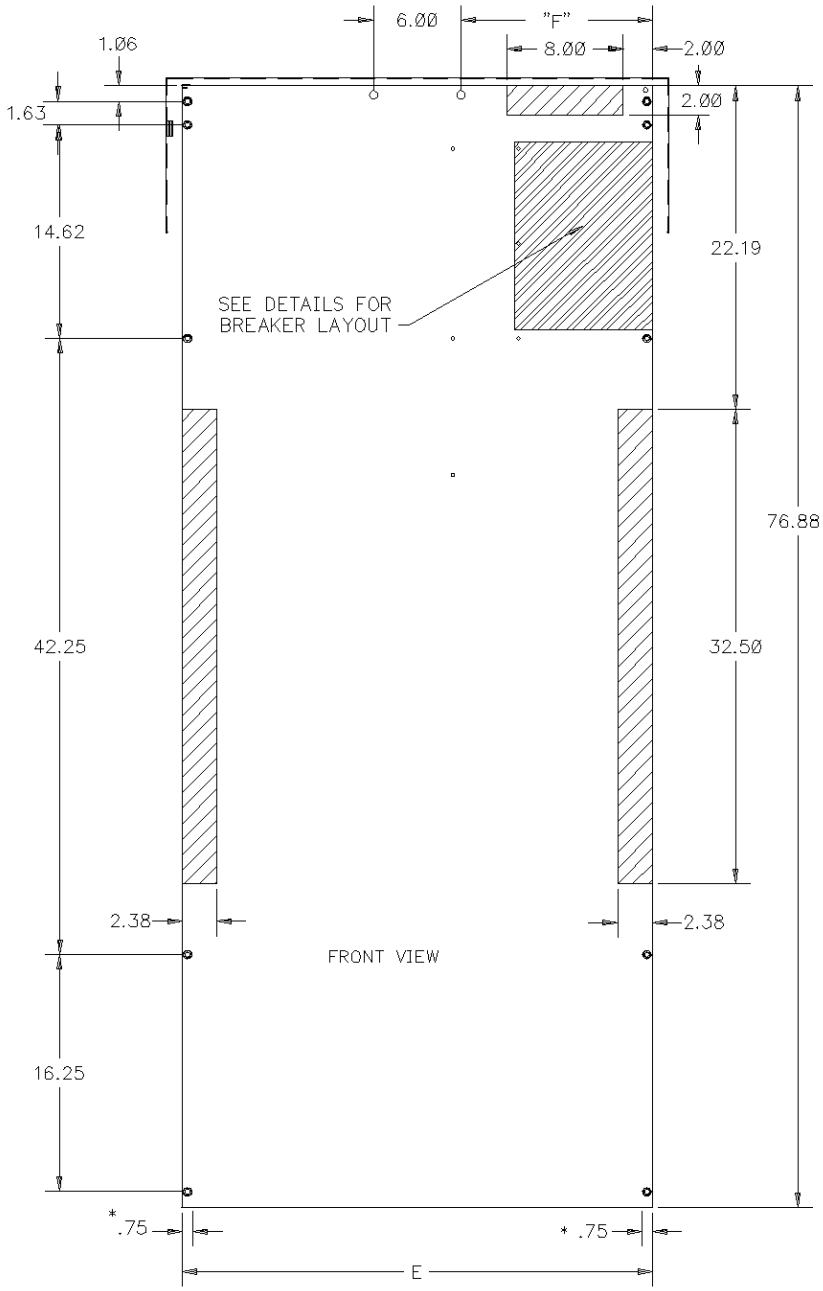

"F" FRAME CIRCUIT BREAKER 8.67 WORKING DEPTH

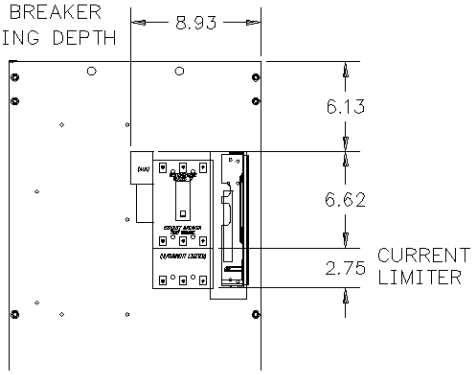

"J" OR "K" FRAME CIRCUIT BREAKER 8.67 WORKING DEPTH

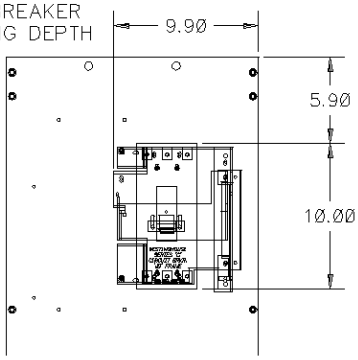

"F"–"J"–"K" FRAME CIRCUIT BREAKER OTHER THAN 8.67 WORKING DEPTH

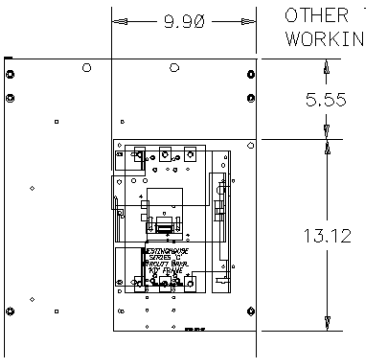

* THESE DIMENSIONS INDICATE AREAS OF POSSIBLE INTERFERENCE FOR HARDWARE THROUGH MTG. PLATE.

1) DIMENSIONS ARE NOT FOR MANUFACTURING PURPOSES.

2) SHADED AREA INDICATES CUTOUTS ON MOUNTING PLATE.

PARTS MUST CONFORM TO APPLICABLE ALLEN-BRADLEY CO. WORKMANSHIP STANDARD 40126-700

References	
Revision	Release
1	10664-06
Refer. Book	

Dimensions Apply Before Surface Treatment
Dimensions In Inches Tolerances Unless Otherwise Specified
2 Place Decimal ±.02
3 Place Decimal ±.005
Angles ±1°

DIMENSION DRAWING
FULL WIDTH MOUNTING PLATES
F-J-K FRAME

Dr. JIM KELLY Date 2-20-06
Chkd. JIM KELLY Date 2-22-06
Appd. T. SAUVE Date 2-22-06

THIS PART	REV.
-01	1

ACAD

Rockwell Automation Allen-Bradley

THIS DRAWING IS THE PROPERTY OF THE ALLEN-BRADLEY CO. INC. AND MAY NOT BE COPIED, USED, OR DISCLOSED FOR ANY PURPOSE EXCEPT AS AUTHORIZED IN WRITING BY THE ALLEN-BRADLEY CO. INC.

Sheet 1 Of 1

Dwg Size C

30101-546

Packaged Control Cadds

Allen-Bradley HMS